Dell™ UltraSharp UP3017A

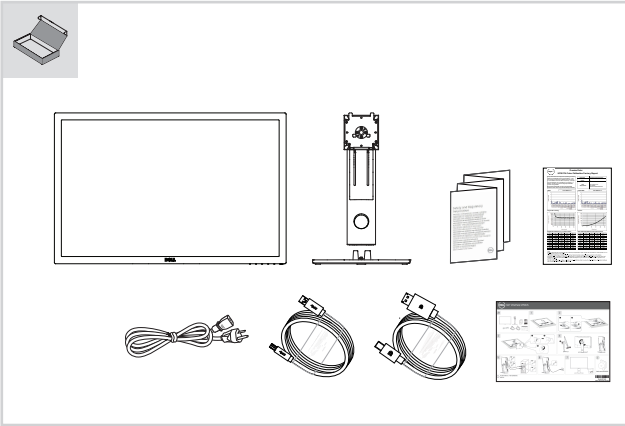

1

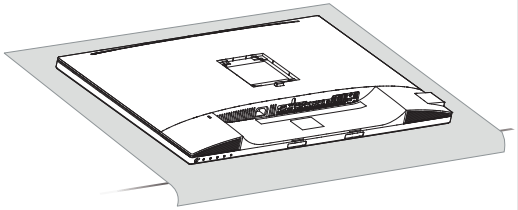

2

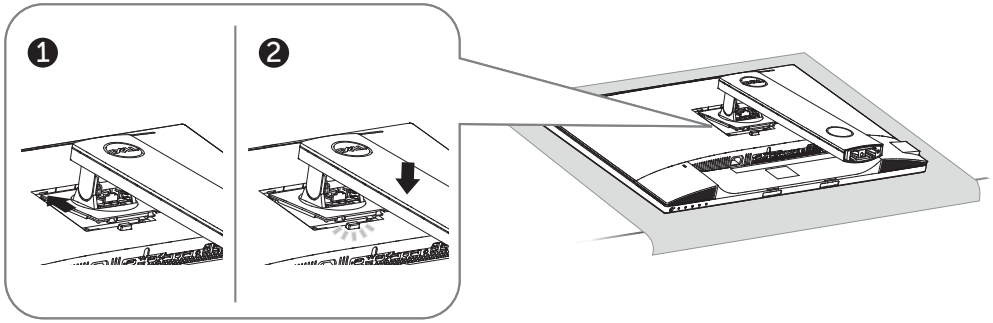

3

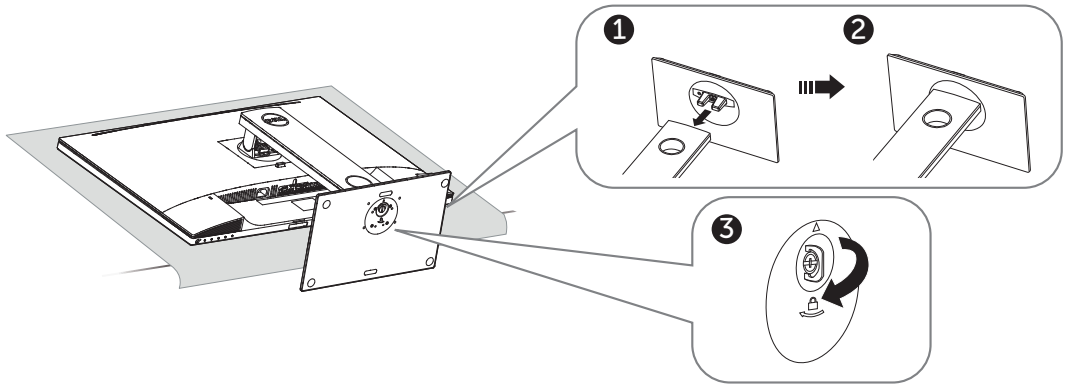

4

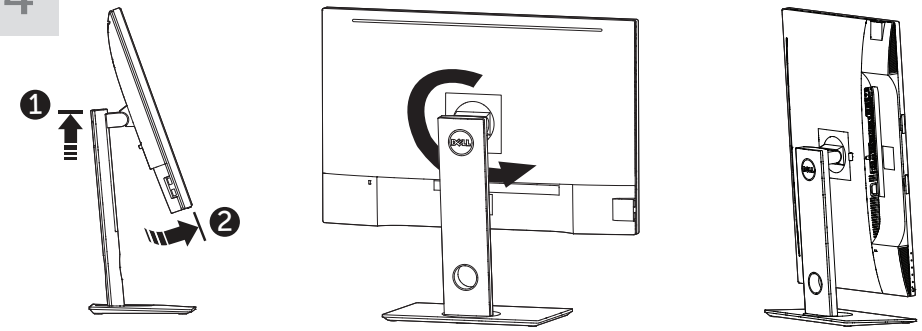

5

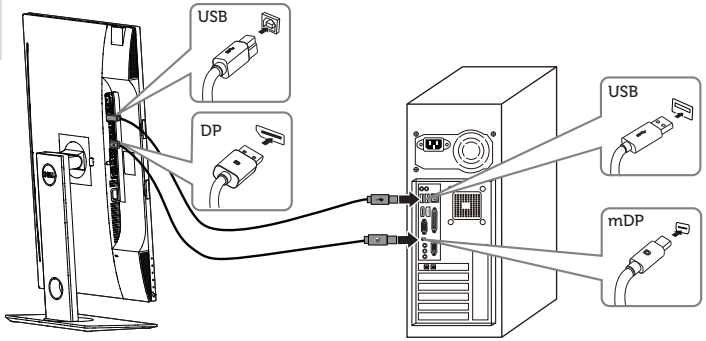

6

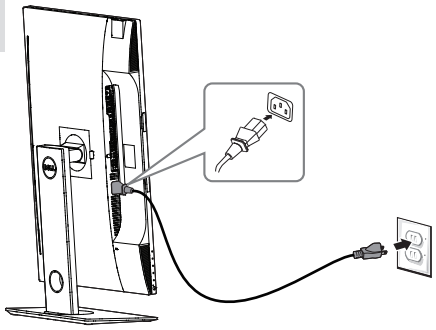

7

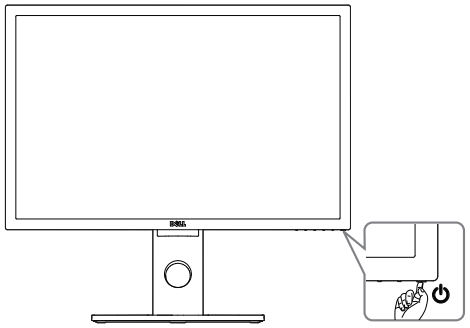

i

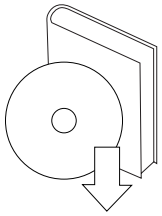

Dell.com/UP3017A

© 2020 Dell Inc. or its subsidiaries.
2020-11

746.A1G07.0001
(DELL P/N:93GWK rev.A00)