C2722DE Outline Dimension
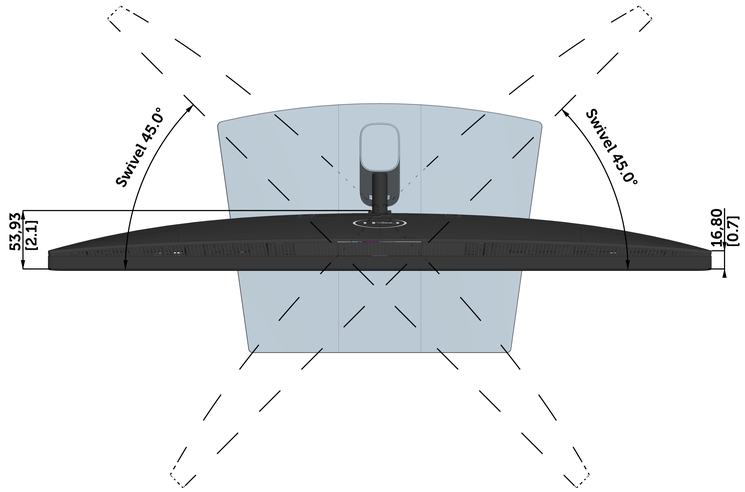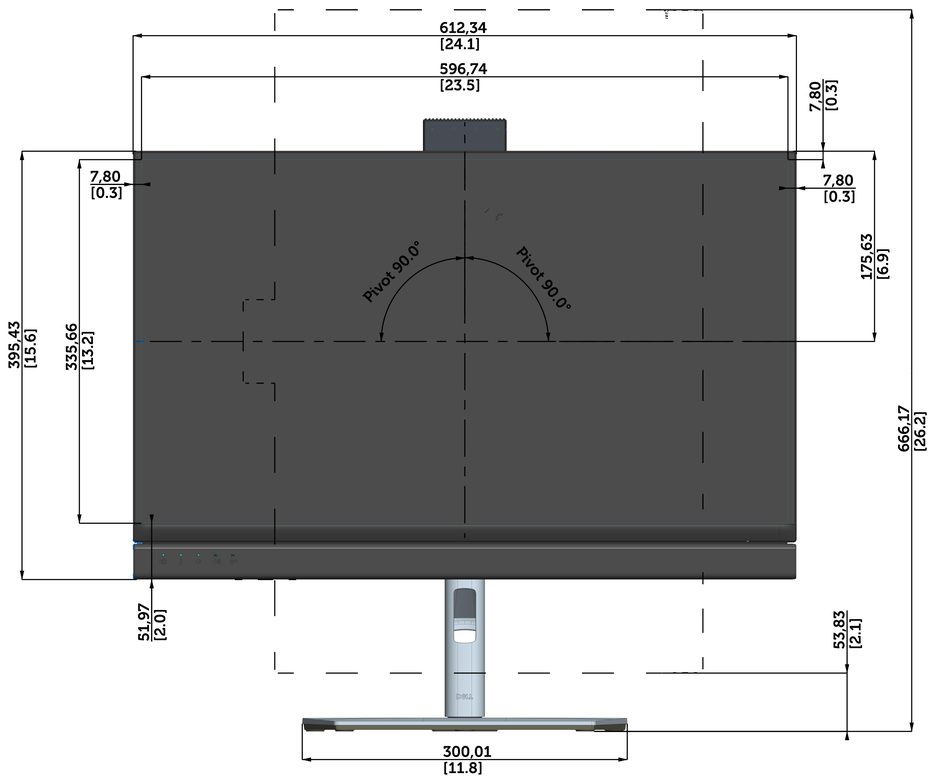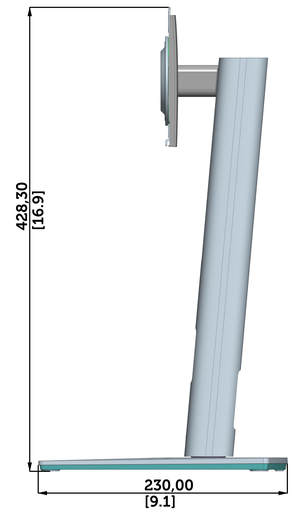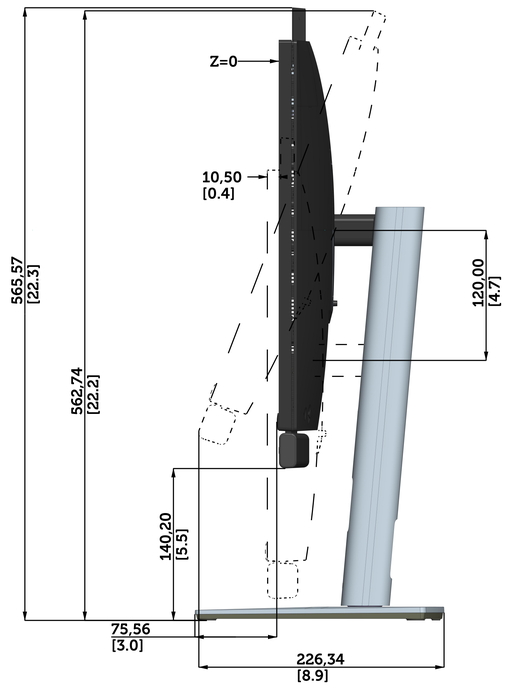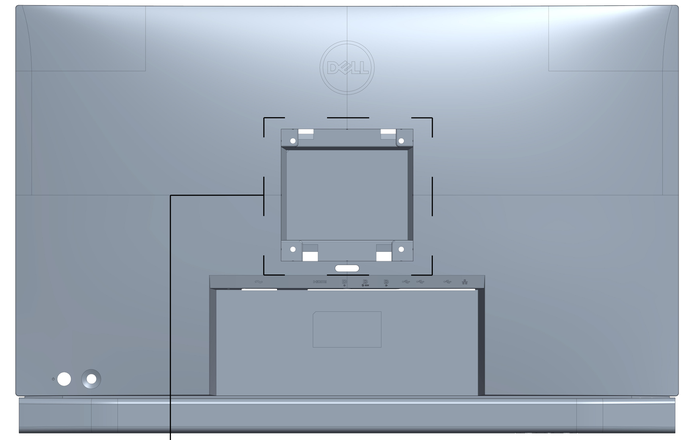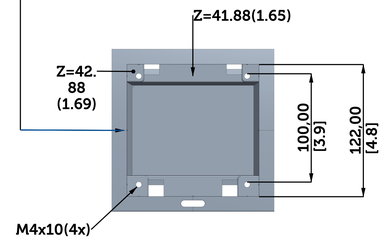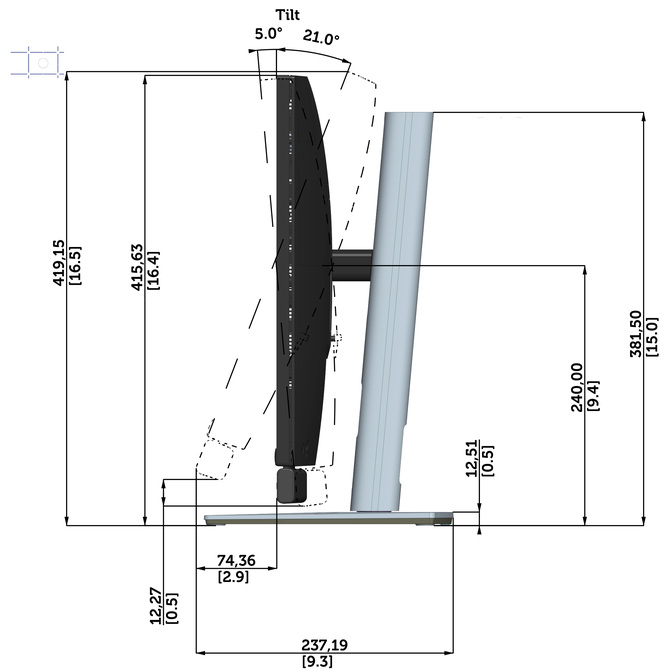
Unit :mm
Dimension :Nominal
Drawing :Not to Scale