AW3821DW Outline Dimension
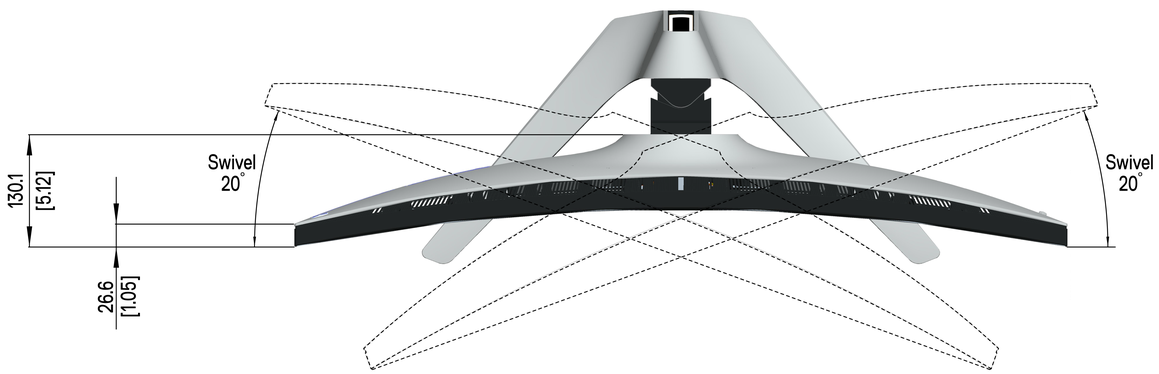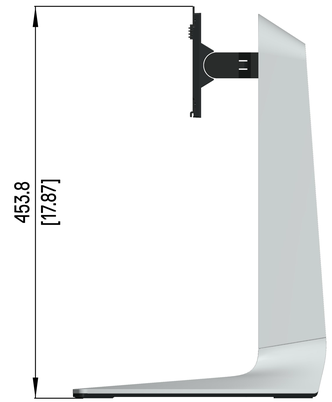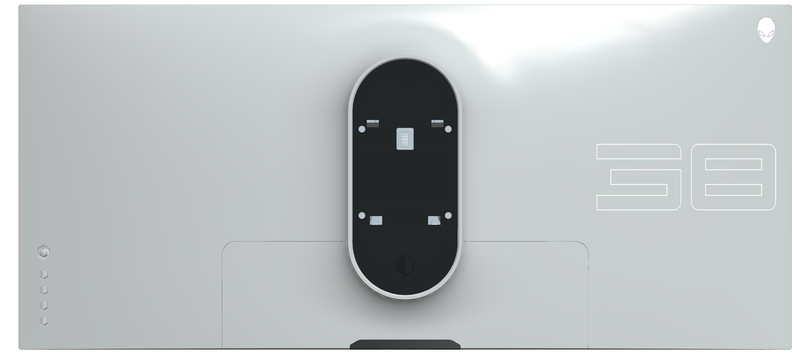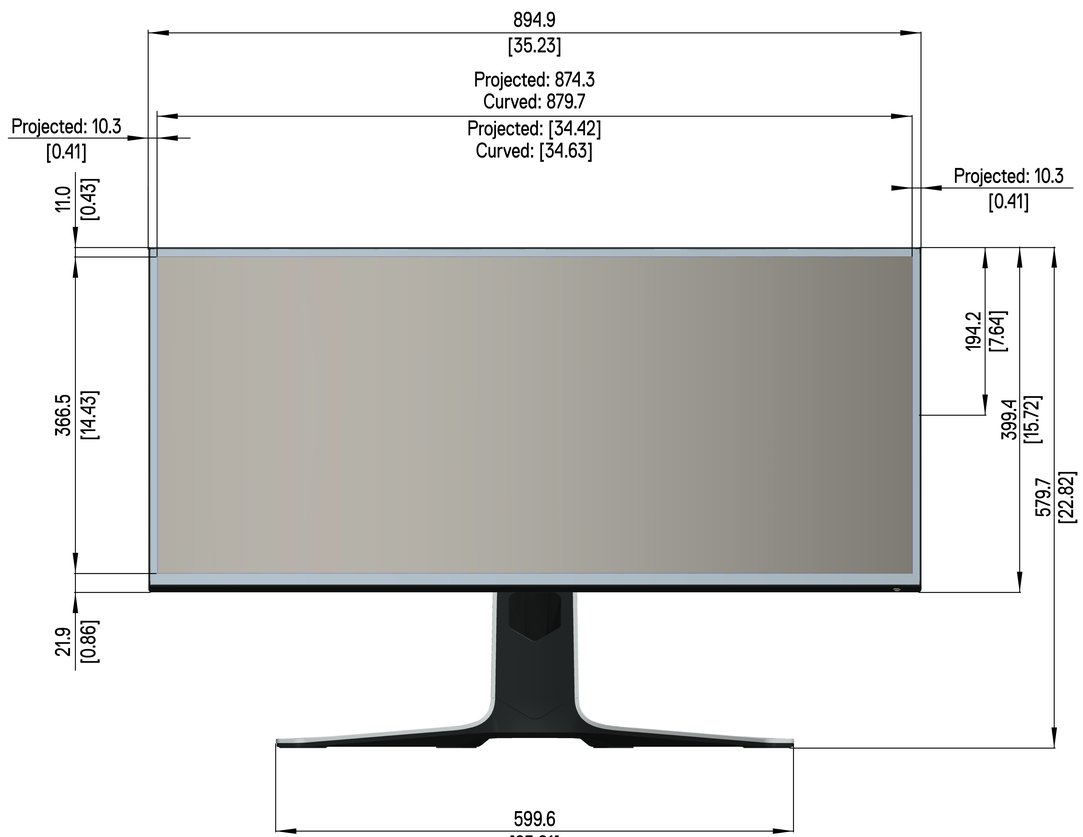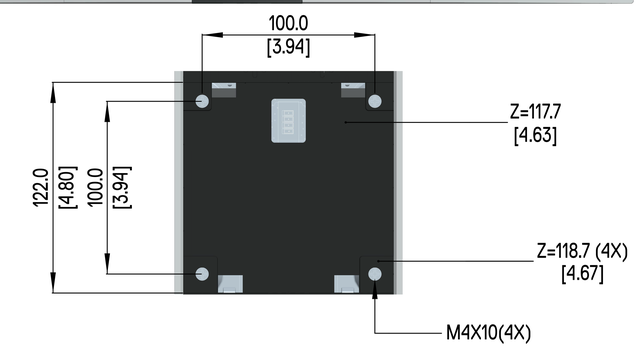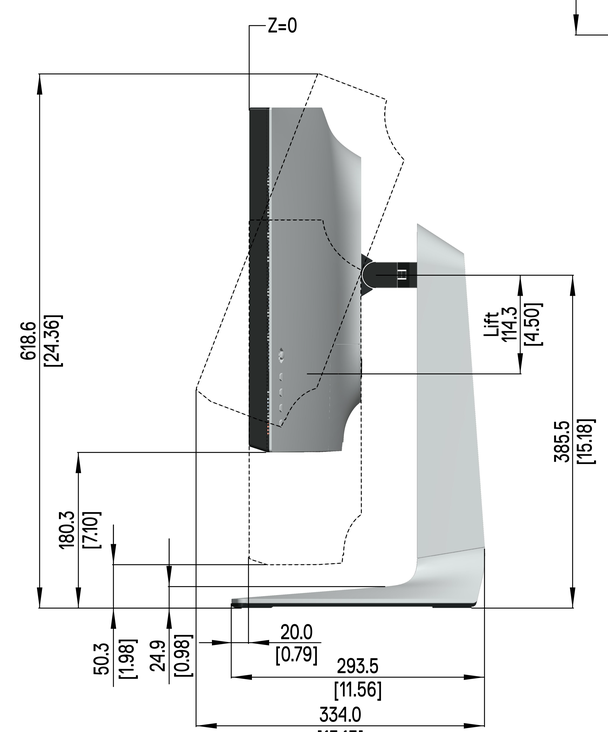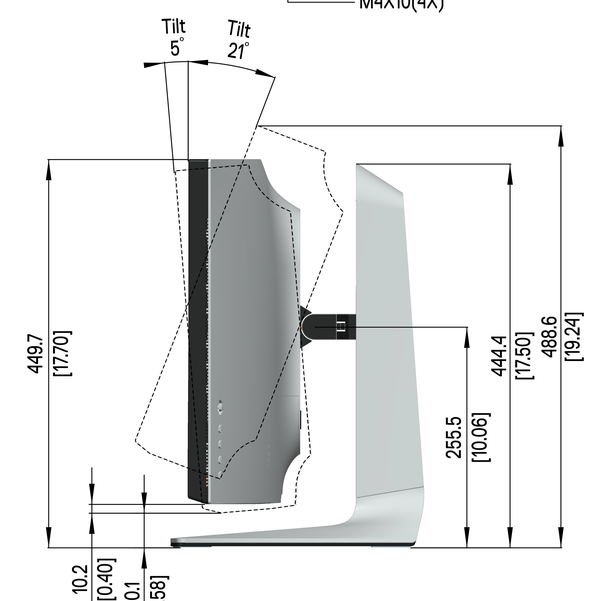
Unit:mm(inch)
Dimension:Nominal
Drawing:Not to scale