S2419H/S2419HN/S2419NX Outline Dimension
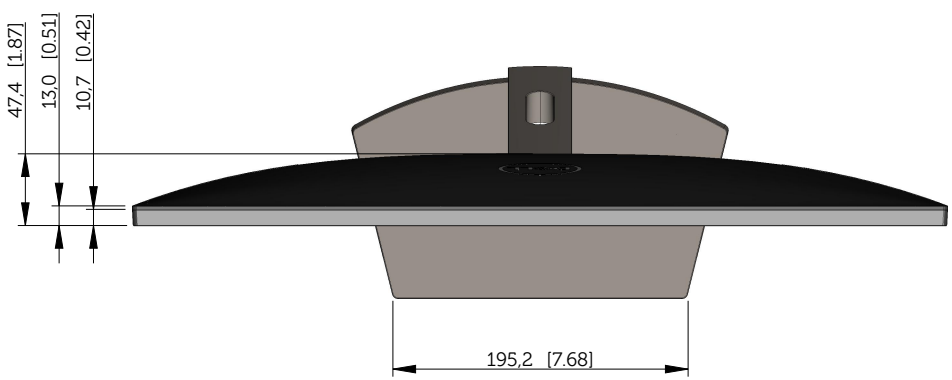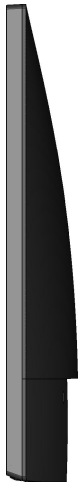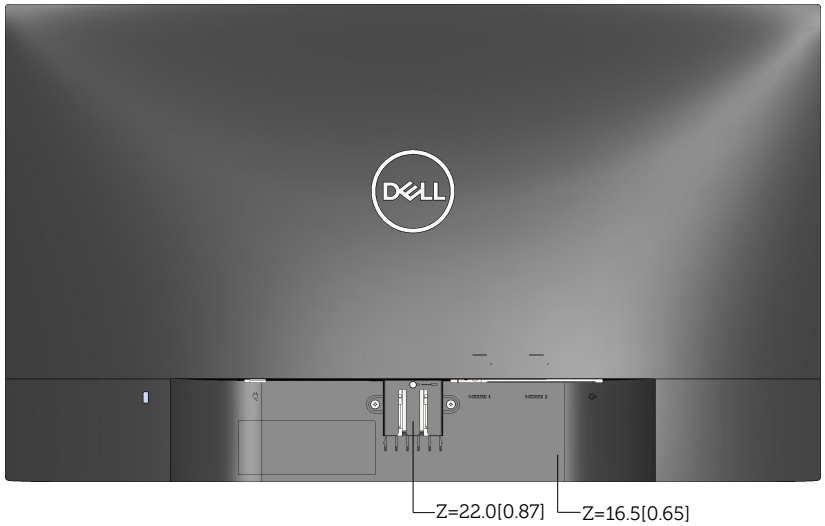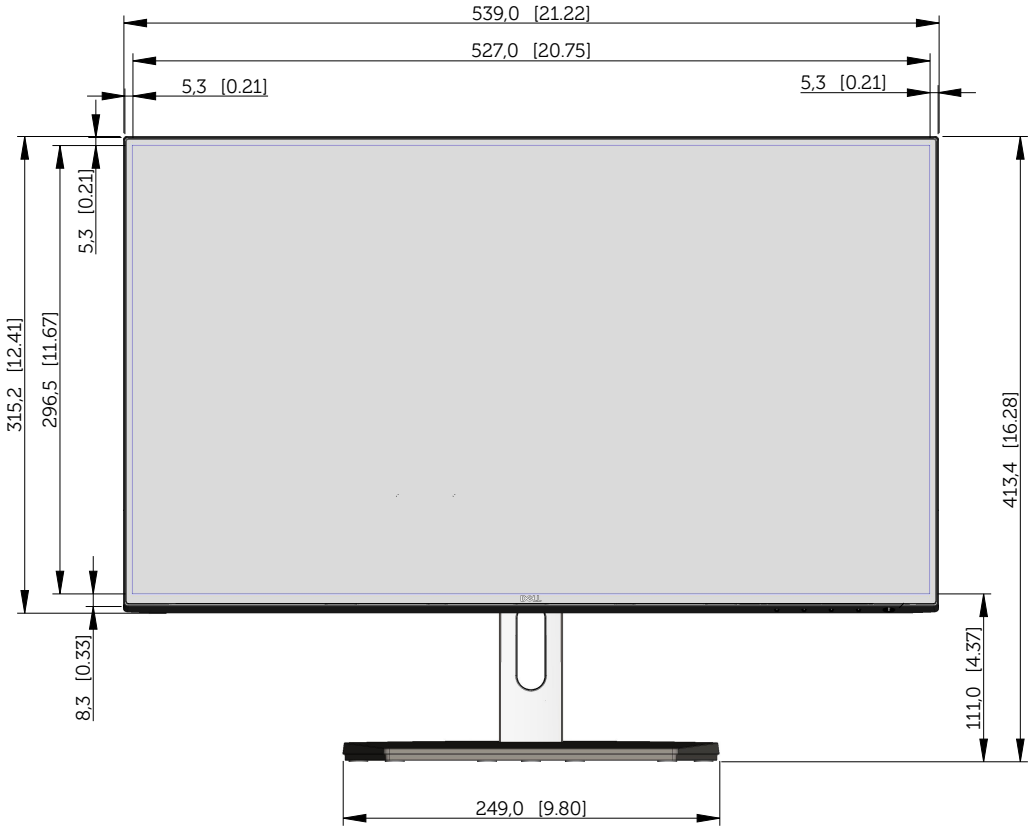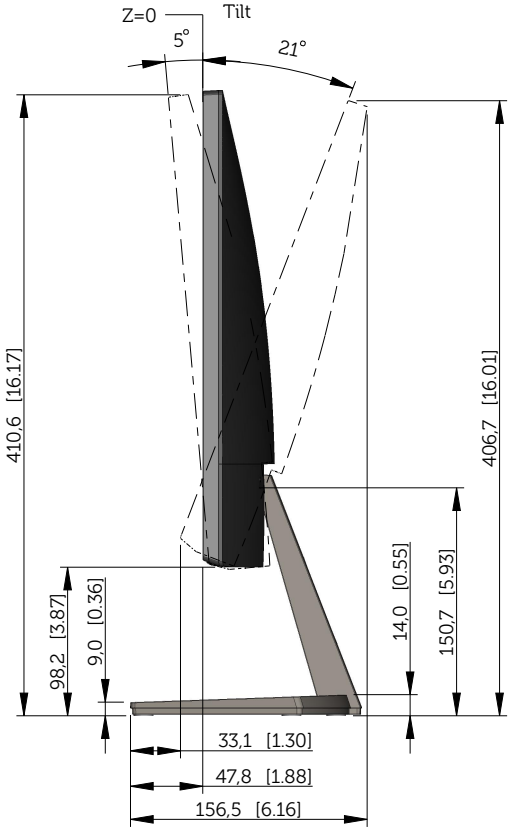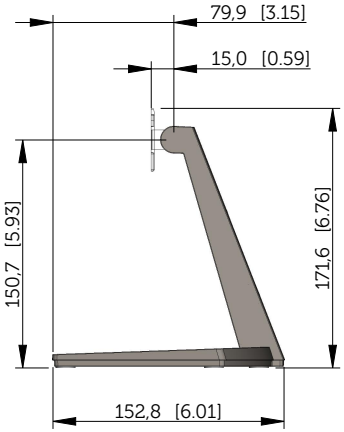
Unit: mm(inch)
Dimension: Nominal
Scale: Not to scale