ALIENWARE® AURORA
SERVICE MANUAL

Notes, Cautions, and Warnings

NOTE: A NOTE indicates important information that helps you make better use of your computer.

CAUTION: A CAUTION indicates either potential damage to hardware or loss of data and tells you how to avoid the problem.

WARNING: A WARNING indicates a potential for property damage, personal injury, or death.

The contents herein are subject to change without notice.

©2009-2010 Dell Inc. All rights reserved.

Reproduction of these materials in any manner whatsoever without the prior written permission of Dell Inc. is strictly prohibited.

Trademarks used in this manual: *Alienware* is a registered trademark of Alienware Corporation; *Dell* and the *DELL* logo are trademarks of Dell Inc.; *Bluetooth* is a registered trademark owned by Bluetooth SIG, Inc. and is used by Dell under license; *Microsoft*, *Windows*, and the *Windows* start button logo are either trademarks or registered trademarks of Microsoft Corporation in the United States and/or other countries; *Intel* and *SpeedStep* are registered trademarks of Intel Corporation in the U.S. and other countries.

Other trademarks and trade names may be used in this manual to refer to either the entities claiming the marks and names or their products. Dell Inc. disclaims any proprietary interest in trademarks and trade names other than its own.

Model: D0IM Type: D0IM001; D0IM002 Rev. A01 FEBRUARY 2010

CONTENTS

CHAPTER 1: BEFORE YOU BEGIN 6
Recommended Tools 7
Turning Off Your Computer 7
Before Working Inside Your Computer 8

CHAPTER 2: LEFT SIDE-PANEL 9
Removing the Left Side-Panel 11
Replacing the Left Side-Panel 11

CHAPTER 3: TECHNICAL OVERVIEW 12
Inside View of Your Computer 13
System Board Components 14
Master I/O Board Components 15

CHAPTER 4: SHROUDS 16
Opening the PCI Shroud 18
Closing the PCI Shroud 18
Removing the Drive-Bay Shroud 19
Replacing the Drive-Bay Shroud 19

CHAPTER 5: DRIVE(S) 20
Removing the Hard Drive(s) 22
Replacing the Hard Drive(s) 24
Removing the Optical Drive(s) 25
Replacing the Optical Drive(s) 26
Removing the Media Card Reader 27
Replacing the Media Card Reader 29

CHAPTER 6: PCI-EXPRESS CARD(S) 30
Removing the PCI-Express Card(s) 32
Replacing the PCI-Express Card(s) 33

CHAPTER 7: MEMORY MODULE(S) 35
Removing the Memory Module(s) 37
Replacing the Memory Module(s) 38

CHAPTER 8: FANS 40
Removing the Hard-Drive Fan Assembly 42
Replacing the Hard-Drive Fan Assembly 43
Removing the PCI-Fan Assembly 44
Replacing the PCI-Fan Assembly 45

CHAPTER 9: PROCESSOR LIQUID-COOLING ASSEMBLY 46
Removing the Processor Liquid-Cooling Assembly 48
Replacing the Processor Liquid-Cooling Assembly 49

CHAPTER 10: PROCESSOR 50
Removing the Processor 52
Replacing the Processor 53

CHAPTER 11: POWER SUPPLY 55
Removing the Power Supply 57
Replacing the Power Supply 59

CHAPTER 12: BATTERY 60
Removing the Coin-Cell Battery 62
Replacing the Coin-Cell Battery 63
Removing the Theater-Lighting Batteries 64
Replacing the Theater-Lighting Batteries 65

CHAPTER 13: SYSTEM BOARD 66
Removing the System Board 68
Replacing the System Board 69

CHAPTER 14: MASTER I/O BOARD 70
Removing the Master I/O Board 72
Replacing the Master I/O Board 73

CHAPTER 15: TOP LIGHTING-BOARD 74
Removing the Top Lighting-Board 76
Replacing the Top Lighting-Board 76

CHAPTER 16: RIGHT SIDE-PANEL(S) 77
Removing the Right Side-Panel(s) 79
Replacing the Right Side-Panel(s) 81

CHAPTER 17: ACTIVE-VENTING ASSEMBLY 82
Removing the Active-Venting Assembly 84
Replacing the Active-Venting Assembly 87

CHAPTER 18: FRONT BEZEL 88
Removing the Front Bezel 90
Replacing the Front Bezel 92

CHAPTER 19: BACK BEZEL 93
Removing the Back Bezel 95
Replacing the Back Bezel 97

CHAPTER 20: BLUETOOTH ASSEMBLY 98
Removing the Bluetooth Assembly 100
Replacing the Bluetooth Assembly 101

CHAPTER 21: TOP I/O PANEL 102
Removing the Top I/O Panel 104
Replacing the Top I/O Panel 105

CHAPTER 22: SYSTEM SETUP 106
Configuring the BIOS 107
Clearing Forgotten Passwords and CMOS Settings 114

APPENDIX A: CONTACTING ALIENWARE 117

CHAPTER 1: BEFORE YOU BEGIN

This manual provides procedures for removing and installing the components in your computer. Unless otherwise noted, each procedure assumes that the following conditions exist:

- You have performed the steps in "Turning Off Your Computer" on page 7 and "Before Working Inside Your Computer" on page 8.
- You have read the safety information that shipped with your computer.
- A component can be replaced or—if purchased separately—installed by performing the removal procedure in reverse order.

Recommended Tools

The procedures in this document may require the following tools:

- Small flat-blade screwdriver
- Phillips screwdriver
- BIOS executable update program available at **support.dell.com**

Turning Off Your Computer

CAUTION: To avoid losing data, save and close all open files and exit all open programs before you turn off your computer.

1. Save and close all open files and exit all open programs.
2. Click **Start** → **Shut Down.**
3. The computer turns off after the operating system shutdown process finishes.
4. Ensure that the computer is turned off. If your computer did not automatically turn off when you shut down the operating system, press and hold the power button until the computer turns off.

Before Working Inside Your Computer

Use the following safety guidelines to help protect your computer from potential damage and to help to ensure your own personal safety.

WARNING: Before you begin any of the procedures in this section, follow the safety instructions that shipped with your computer. For additional safety best practices information, see the Regulatory Compliance Homepage at www.dell.com/regulatory_compliance.

CAUTION: Only a certified service technician should perform repairs on your computer. Damage due to servicing that is not authorized by Dell is not covered by your warranty.

CAUTION: When you disconnect a cable, pull on its connector or on its pull-tab, not on the cable itself. Some cables have connectors with locking tabs; if you are disconnecting this type of cable, press in on the locking tabs before you disconnect the cable. As you pull connectors apart, keep them evenly aligned to avoid bending any connector pins. Also, before you connect a cable, ensure that both connectors are correctly oriented and aligned.

CAUTION: To avoid damaging the computer, perform the following steps before you begin working inside the computer.

1. Ensure that the work surface is flat and clean.
2. Turn off your computer (see "Turning Off Your Computer" on page 7).

CAUTION: To disconnect a network cable, first unplug the cable from your computer and then unplug the cable from the network device.

3. Disconnect all telephone or network cables from the computer.
4. Disconnect your computer and all attached devices from their electrical outlets.
5. Disconnect all attached devices from your computer.
6. Press and eject any installed cards from the Media Card Reader.
7. Press and hold the power button to ground the system board.

CAUTION: Before touching anything inside your computer, ground yourself by touching an unpainted metal surface, such as the metal at the back of the computer. While you work, periodically touch an unpainted metal surface to dissipate static electricity, which could harm internal components.

NOTE: For better access to components within your computer, lay your computer on its side.

CHAPTER 2: LEFT SIDE-PANEL

Left Side-Panel

WARNING: Before working inside your computer, read the safety information that shipped with your computer. For additional safety best practices information, see the Regulatory Compliance Homepage at www.dell.com/regulatory_compliance.

WARNING: To guard against likelihood of electric shock, laceration by moving fan blades, or other unexpected injuries, always unplug your computer from the electrical outlet before removing the side panel(s).

WARNING: Do not operate your computer with any cover(s) (including computer covers, bezels, filler brackets, front-panel inserts, etc.) removed.

CAUTION: Only a certified service technician should perform repairs on your computer. Damage due to servicing that is not authorized by Dell™ is not covered by your warranty.

Removing the Left Side-Panel

1. Follow the instructions in "Before You Begin" on page 6.

NOTE: Ensure that you remove the security cable from the security cable slot (if applicable).

2. Slide the latch to unlock the release panel.
3. Lift the release panel to open the left-side panel.
4. Place the left side-panel in a secure location.

NOTE: Theater lighting (available only in Alienware Aurora ALX) turns on automatically when the left side-panel is removed.

Replacing the Left Side-Panel

1. Follow the instructions in "Before You Begin" on page 6.
2. Align the tabs on the left side-panel with the slots on the side of the computer and push the panel in place.
3. Slide the latch to lock the release panel.

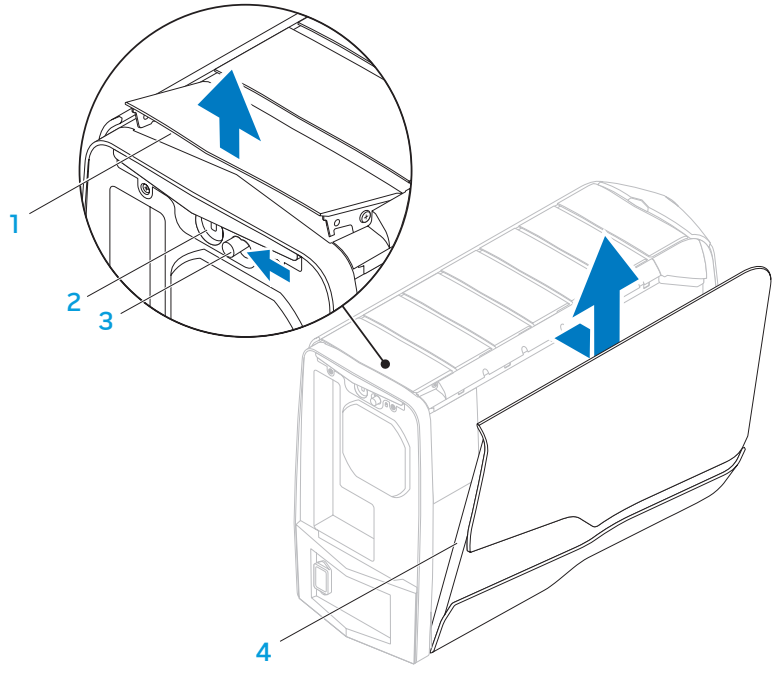

1 release panel
2 security cable slot
3 latch
4 left side-panel

CHAPTER 3: TECHNICAL OVERVIEW

CHAPTER 3: TECHNICAL OVERVIEW

Inside View of Your Computer

WARNING: Before working inside your computer, read the safety information that shipped with your computer. For additional safety best practices information, see the Regulatory Compliance Homepage at www.dell.com/regulatory_compliance.

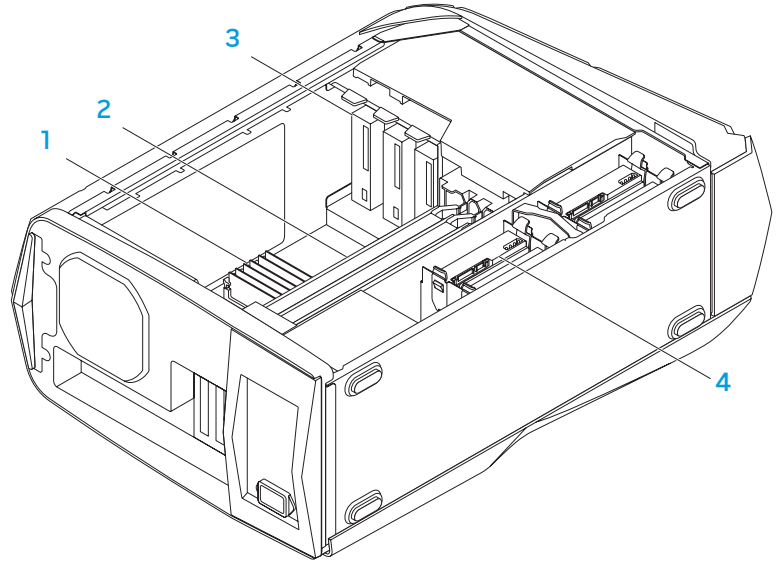

1 memory module(s)
2 graphic cards (2)
3 optical drives (3)
4 hard drives (4)

System Board Components

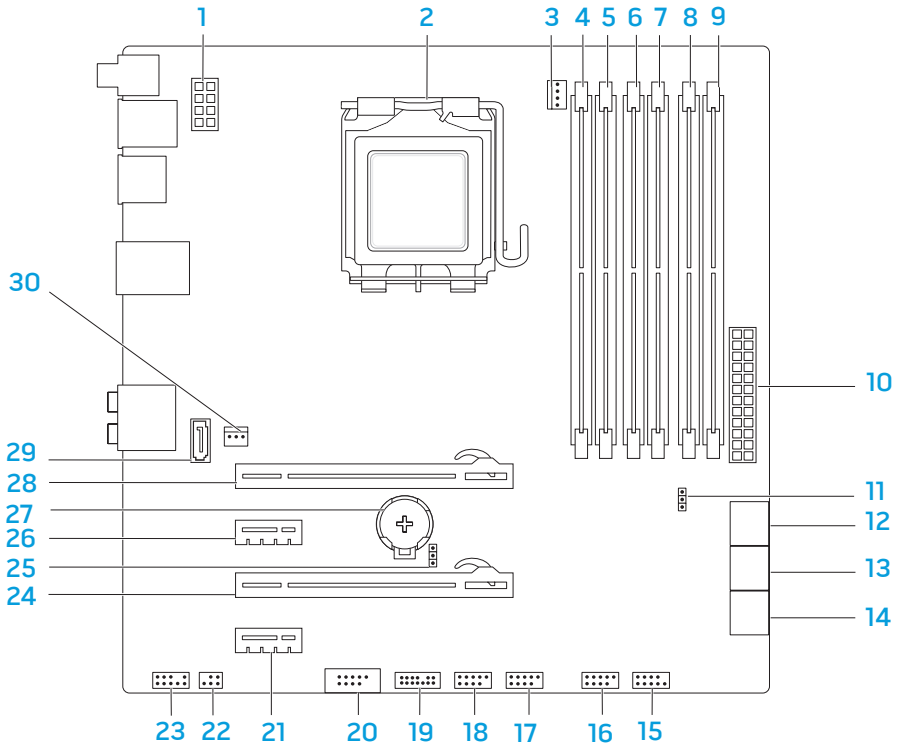

1 processor power connector (PWR2)

2 processor socket (CPU)

3 processor fan connector (MB_CPU_FAN)

4 memory-module connector (DIMM2) (Aurora and Aurora ALX) memory-module connector (DIMM3) (Aurora-R2)

5 memory-module connector (DIMM1)

6 memory-module connector (DIMM4)

7 memory-module connector (DIMM3) (Aurora and Aurora ALX) memory-module connector (DIMM2) (Aurora-R2)

8 memory-module connector (DIMM6) (Aurora and Aurora ALX only)

9 memory-module connector (DIMM5) (Aurora and Aurora ALX only)

10 main power connector (PWR1)

11 password jumper (PASSWORD)

12 serial ATA drive connectors (SATA1_2)

13 serial ATA drive connectors (SATA3_4)

14 serial ATA drive connectors (SATA5_6)

15 front panel connector (FRONT_PANEL)

16 USB connector (USB1)

17 USB connector (USB2)

18 USB connector (USB3)

19 Low pin count debug header (LPC1)

20 IEEE 1394 connector (1394)

21 PCI-Express x1 connector (SLOT4)

22 S/PDIF connector (SPDIF) (Aurora and Aurora ALX only)

23 front audio connector (FRONT AUDIO)

24 PCI-Express x16 connector (SLOT3)

25 CMOS jumper (CLEAR_CMOS)

26 PCI-Express x1 connector (SLOT2)

27 battery socket (BAT1)

28 PCI-Express x16 connector (SLOT1)

29 eSATA connector (ESATA)

30 processor cooling assembly connector (CHIPSET_FAN)

Master I/O Board Components

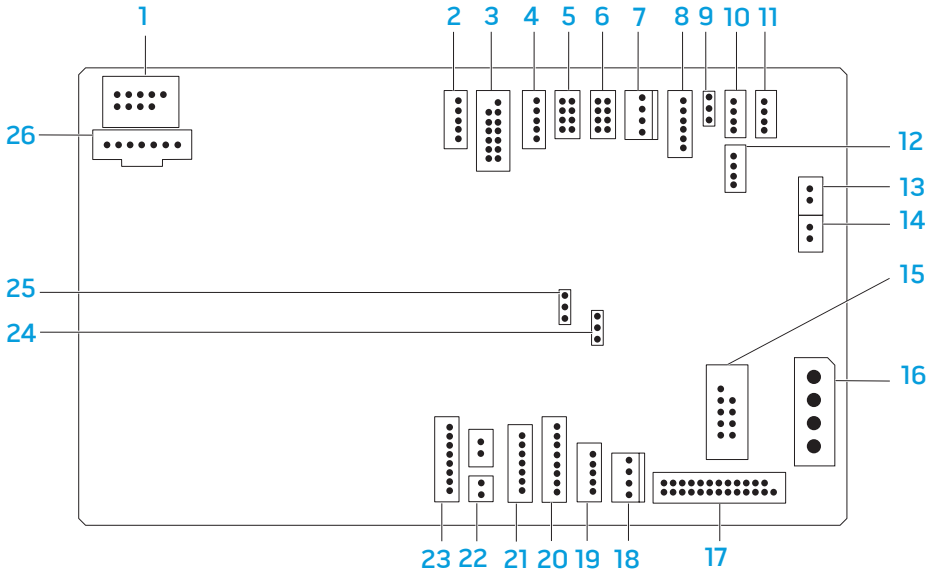

1 flexbay connector (FLEXBAY)

2 drive-bay shroud battery connector (FRONT_BEZEL)

3 active-vent connector (ACTIVE_VENT)

4 AlienHead connector (HEAD1)

5 front-bezel right connector (FRONT_RIGHT)

6 front-bezel left connector (FRONT_LEFT)

7 PCI-fan connector (FAN_PCI)

8 left side-panel contact board connector (SIDE_L)

9 power-select connector (PWR_SEL)

10 Bluetooth® connector (BLUETOOTH)

11 power-LED board connector (BLINK)

12 wireless connector (WIRELESS)

13 hard-drive LED connector (HDD_LED1)

14 hard-drive LED connector (HDD_LED2)

15 USB connector (MB_USB)

16 main-power connector (PWR1)

17 system-board lighting (MB_MIO)

18 hard-drive fan connector (FAN_HDD)

19 right side-panel connector (SIDE_R)

20 vent-motor connector (VENT_MOTOR1)

21 vent sensors (VENT_SW)

22 ODD sensors (ODD_SW)

23 vent-motor sensor connector (VENT_MOTOR2)

24 internal theater-lighting connector (BAT2)

25 front-default connector (FACTORY_DEFAULT)

26 graphics-pump connector (GFX_PUMP)

CHAPTER 4: SHROUDS

Shrouds

WARNING: Before working inside your computer, read the safety information that shipped with your computer. For additional safety best practices information, see the Regulatory Compliance Homepage at www.dell.com/regulatory_compliance.

WARNING: Do not operate your computer with any cover(s) (including computer covers, bezels, filler brackets, front-panel inserts, etc.) removed.

WARNING: To guard against electrical shock, always unplug your computer from the electrical outlet before removing the side panel(s).

CAUTION: Only a certified service technician should perform repairs on your computer. Damage due to servicing that is not authorized by Dell™ is not covered by your warranty.

Opening the PCI Shroud

1. Follow the instructions in “Before You Begin” on page 6.
2. Remove the left side-panel (see “Removing the Left Side-Panel“ on page 11).
3. Press the release button and rotate the PCI shroud away from the chassis.

Closing the PCI Shroud

1. Follow the instructions in “Before You Begin” on page 6.
2. Lower the PCI shroud into the chassis until it clicks into place.
3. Replace the left side-panel (see “Replacing the Left Side-Panel“ on page 11).
4. Connect your computer and devices to electrical outlets and then turn them on.

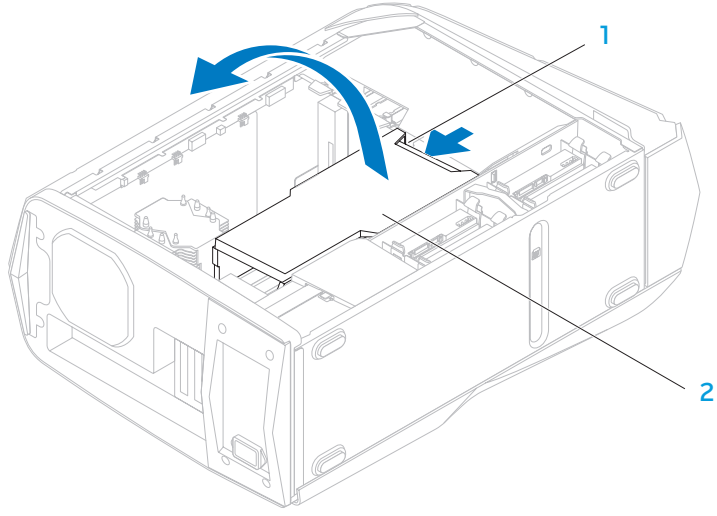

1 release button 2 PCI shroud

Removing the Drive-Bay Shroud

1. Follow the instructions in "Before You Begin" on page 6.
2. Remove the left side-panel (see "Removing the Left Side-Panel" on page 11).
3. Open the PCI shroud (see "Opening the PCI Shroud" on page 18).
4. Press the tabs and slide the drive-bay shroud towards the back of the chassis.
5. Disconnect the drive-bay shroud battery cable from the connector on the master I/O board.

Replacing the Drive-Bay Shroud

1. Follow the instructions in "Before You Begin" on page 6.
2. Connect the drive-bay shroud battery cable to the connector on the master I/O board.
3. Align the drive-bay shroud with the slots on the chassis.
4. Slide the drive-bay shroud toward the front of the chassis until it clicks into place.
5. Close the PCI shroud (see "Closing the PCI Shroud" on page 18).
6. Replace the left side-panel (see "Replacing the Left Side-Panel" on page 11).
7. Connect your computer and devices to electrical outlets and then turn them on.

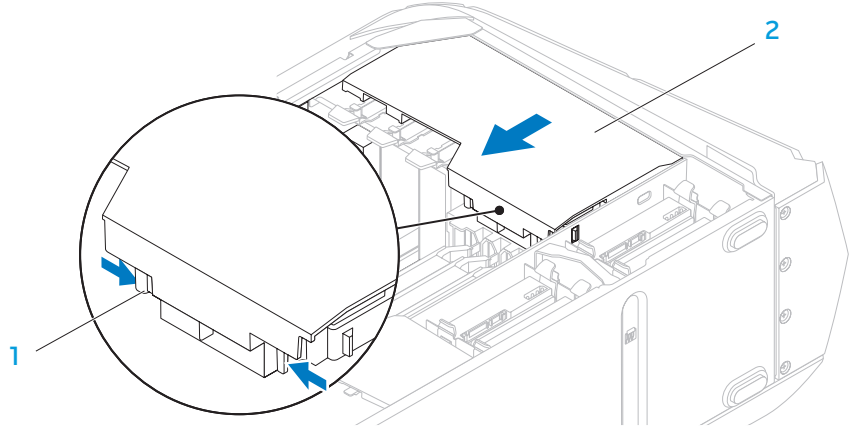

1 tabs (2)

2 drive-bay shroud

CHAPTER 5: DRIVE(S)

Drive(s)

WARNING: Before working inside your computer, read the safety information that shipped with your computer. For additional safety best practices information, see the Regulatory Compliance Homepage at www.dell.com/regulatory_compliance.

WARNING: Do not operate your computer with any cover(s) (including computer covers, bezels, filler brackets, front-panel inserts, etc.) removed.

WARNING: To guard against electrical shock, always unplug your computer from the electrical outlet before removing the side panel(s).

WARNING: If you remove the hard drive from the computer when the drive is hot, *do not touch* the metal housing of the hard drive.

CAUTION: Only a certified service technician should perform repairs on your computer. Damage due to servicing that is not authorized by Dell™ is not covered by your warranty.

CAUTION: To prevent data loss, turn off your computer (see "Turning Off Your Computer" on page 7) before removing the hard drive. Do not remove the hard drive while the computer is on or in Sleep state.

CAUTION: Hard drives are extremely fragile. Exercise care when handling the hard drive.

CAUTION: To avoid electrostatic discharge, ground yourself by using a wrist grounding strap or by periodically touching an unpainted metal surface (such as a connector on the back of the computer).

NOTE: Dell does not guarantee compatibility or provide support for hard drives from sources other than Dell or Alienware.

NOTE: If you are installing a hard drive from a source other than Dell or Alienware, you need to install an operating system, drivers, and utilities on the new hard drive.

Removing the Hard Drive(s)

CAUTION: If you are replacing a hard drive that contains data you want to keep, back up your files before you begin this procedure.

1. Follow the instructions in "Before You Begin" on page 6.
2. Remove the left side-panel (see "Removing the Left Side-Panel" on page 11).
3. Disconnect the power and data cables from the hard-drive assembly (if applicable).

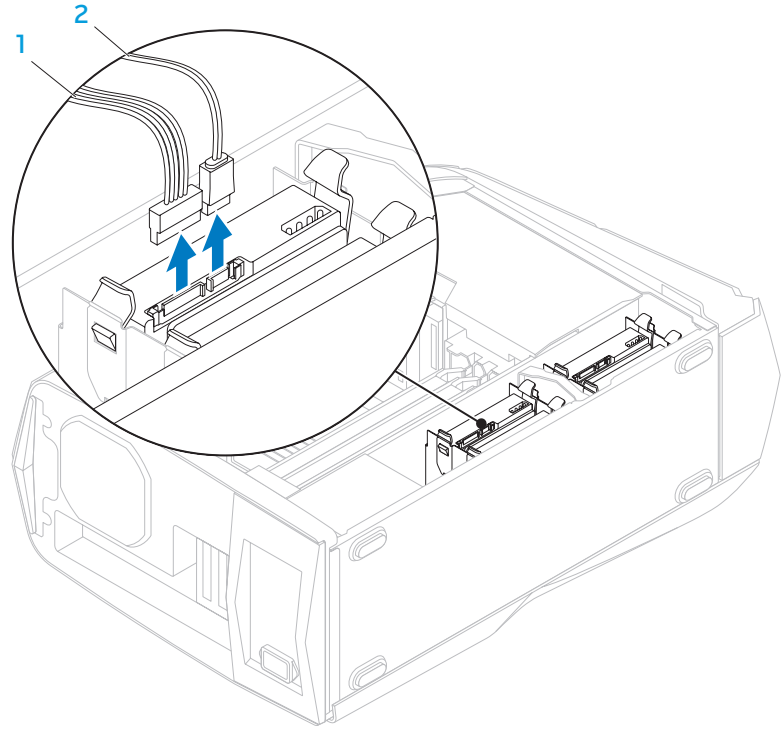

1 power cable 2 data cable

4. Press the release tabs and slide the hard-drive assembly out of the hard-drive cage.

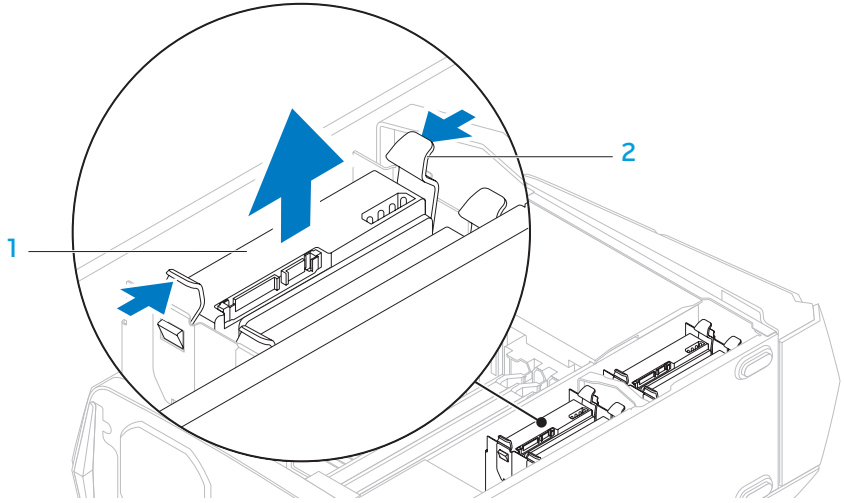

1 hard-drive assembly 2 release tabs (2)

5. Remove the hard drive out of the hard-drive bracket by releasing the tabs and lifting the hard drive out of the bracket (if applicable).

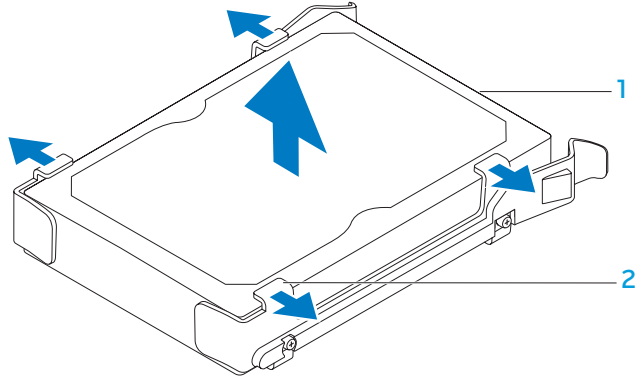

1 hard drive 2 tabs (4)

Replacing the Hard Drive(s)

1. Follow the instructions in "Before You Begin" on page 6.
2. See the documentation that shipped with your new hard drive and ensure that the jumper positioning is correct.
3. Snap the hard-drive bracket on to the new hard drive (if applicable).
4. Slide the hard-drive assembly into the hard-drive cage until the release tabs snap into place.
5. Connect the power and data cables to the hard-drive assembly (if applicable).
6. Replace the left side-panel (see "Replacing the Left Side-Panel" on page 11).
7. Connect your computer and devices to electrical outlets and then turn them on.

Removing the Optical Drive(s)

1. Follow the instructions in “Before You Begin” on page 6.
2. Press the AlienHead on the front of your computer to lower the drive panel.
3. Remove the left side-panel (see “Removing the Left Side-Panel“ on page 11).
4. Open the PCI shroud (see “Opening the PCI Shroud” on page 18).
5. Disconnect the power and data cables from the optical drive (if applicable).
6. Lift the securing tab and slide the optical drive out through the front of the computer.

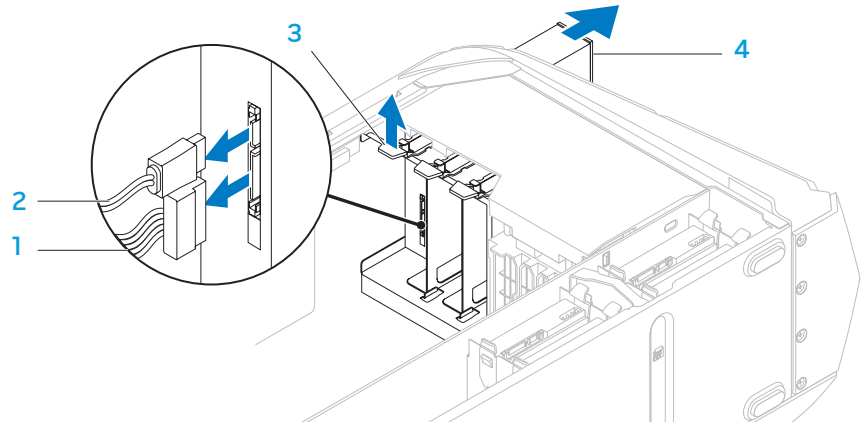

1 power cable
2 data cable
3 securing tab
4 optical drive

Replacing the Optical Drive(s)

1. Follow the instructions in “Before You Begin” on page 6.
2. Remove the new optical drive from its packaging. Save the original packaging for storing or shipping the optical drive.
3. Remove the optical-drive bay filler (if applicable).
4. Lift the securing tab and slide the optical drive through the front of the computer until the securing tab snaps into place.
5. Connect the power and data cables to the optical drive (if applicable).
6. Close the PCI shroud (see “Closing the PCI Shroud” on page 18).
7. Replace the left side-panel (see “Replacing the Left Side-Panel“ on page 11).
8. Lift the drive panel towards the top of your computer.
9. Connect your computer and devices to electrical outlets and then turn them on.

Removing the Media Card Reader

1. Follow the instructions in “Before You Begin” on page 6.
2. Press the AlienHead on the front of your computer to lower the drive panel.
3. Remove the left side-panel (see “Removing the Left Side-Panel“ on page 11).
4. Open the PCI shroud (see “Opening the PCI Shroud” on page 18).
5. Disconnect the FlexBay USB cable from the connector on the master I/O board.
6. Lift the securing tab and slide the FlexBay dock out through the front of the computer.

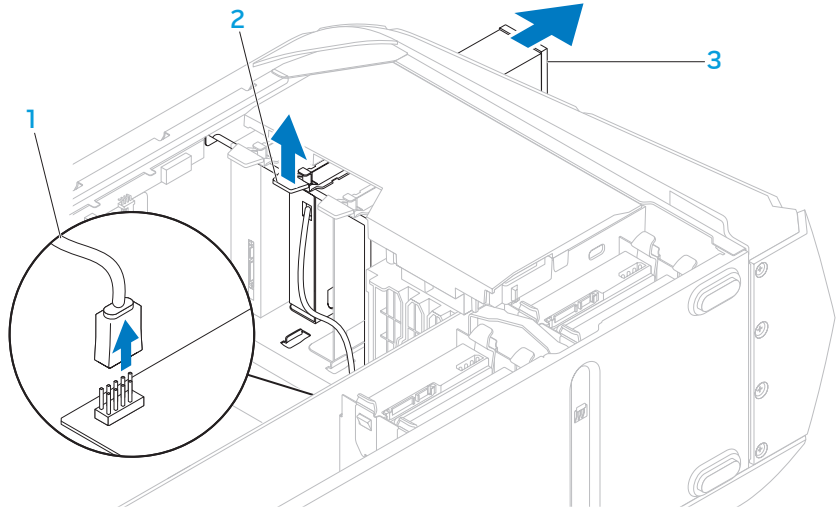

1 FlexBay USB cable
2 securing tab
3 FlexBay dock

7. Remove the four screws that secure the Media Card Reader to the FlexBay dock.
8. Slide the Media Card Reader out of the FlexBay dock.

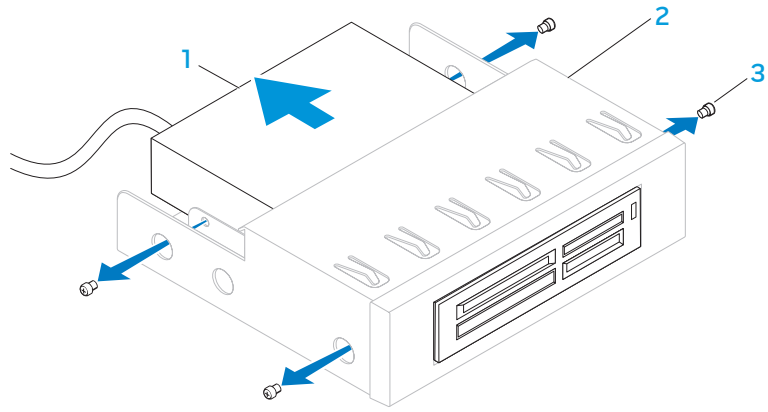

1 Media Card Reader
2 FlexBay dock
3 screws (4)

Replacing the Media Card Reader

1. Follow the instructions in "Before You Begin" on page 6.
2. Remove the new Media Card Reader from its packaging. Save the original packaging for storing or shipping the Media Card Reader.
3. Slide the Media Card Reader into the FlexBay dock.
4. Replace the four screws that secure the Media Card Reader to the FlexBay dock.
5. Lift the securing tab and slide the FlexBay dock through the front of the computer until the securing tab snaps into place.
6. Connect the FlexBay USB cable to the connector on the master I/O board.
7. Close the PCI shroud (see "Closing the PCI Shroud" on page 18).
8. Replace the left side-panel (see "Replacing the Left Side-Panel" on page 11).
9. Lift the drive panel towards the top of your computer.
10. Connect your computer and devices to electrical outlets and then turn them on.

CHAPTER 6: PCI-EXPRESS CARD(S)

PCI-Express Card(s)

WARNING: Before working inside your computer, read the safety information that shipped with your computer. For additional safety best practices information, see the Regulatory Compliance Homepage at www.dell.com/regulatory_compliance.

WARNING: Do not operate your computer with any cover(s) (including computer covers, bezels, filler brackets, front-panel inserts, etc.) removed.

WARNING: To guard against electrical shock, always unplug your computer from the electrical outlet before removing the side panel(s).

CAUTION: Only a certified service technician should perform repairs on your computer. Damage due to servicing that is not authorized by Dell™ is not covered by your warranty.

Removing the PCI-Express Card(s)

1. Follow the instructions in "Before You Begin" on page 6.
2. Remove the left side-panel (see "Removing the Left Side-Panel" on page 11).
3. Open the PCI shroud (see "Opening the PCI Shroud" on page 18).
4. Locate the PCI-Express card on the system board (see "System Board Components" on page 14).
5. Disconnect any cables connected to the card (if applicable).
6. Remove the screw that secures the card to the chassis.
7. Remove the card.
   - For a PCI-Express x1 card, grasp the card by its top corners, and ease it out the card connector.
   - For a PCI-Express x16 card, press the securing tab on the card connector as you grasp the card by its top corners, and then ease the card out of the card connector.

NOTE: If you are not replacing a card, install a filler bracket in the empty card-slot opening.

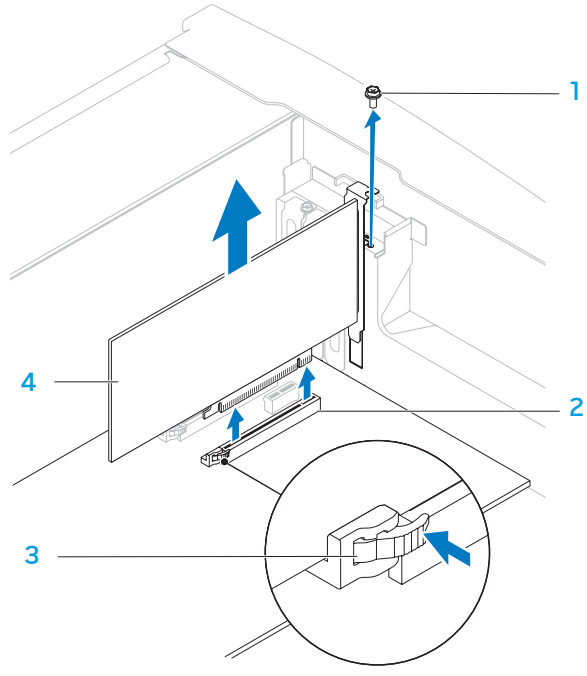

1 screw
2 card connector
3 securing tab
4 card

Replacing the PCI-Express Card(s)

1. Follow the instructions in "Before You Begin" on page 6.
2. Remove the filler bracket to create a card-slot opening (if applicable).

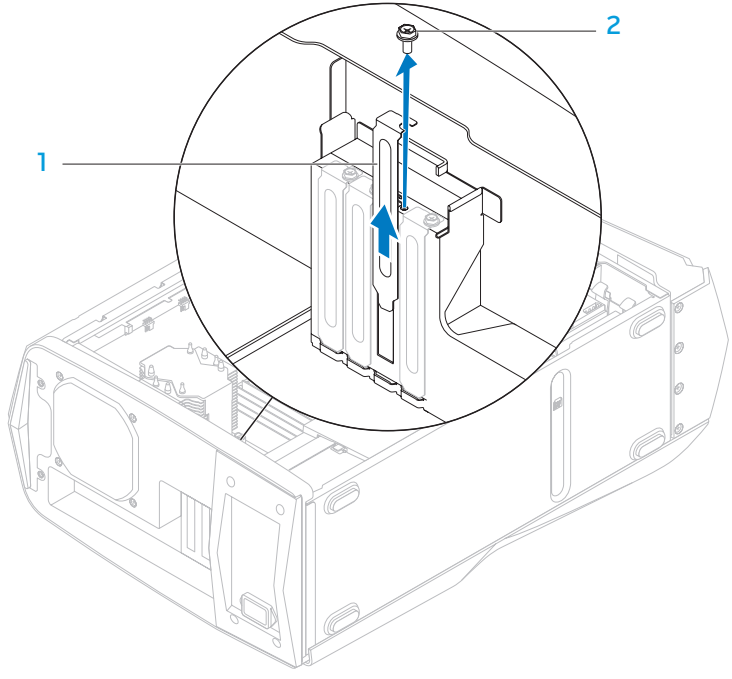

1 filler bracket 2 screw

CAUTION: To prevent damage to the PCI-Express card ensure that the memory module securing clips are in the closed position.

3. Align the card with the card connector on the system board.
4. Place the card in the connector and press down firmly. Ensure that the card is firmly seated in the slot. If you are installing the PCI-Express x16 card, push the securing tab and insert the card in the connector.
5. Connect any cables that should be attached to the card (if applicable). For information about the card's cable connections, see the documentation that shipped with the card.
6. Replace the screw that secures the card to the chassis.
7. Close the PCI shroud (see "Closing the PCI Shroud" on page 18).
8. Replace the left side-panel (see "Replacing the Left Side-Panel" on page 11).
9. Connect your computer and devices to electrical outlets and then turn them on.

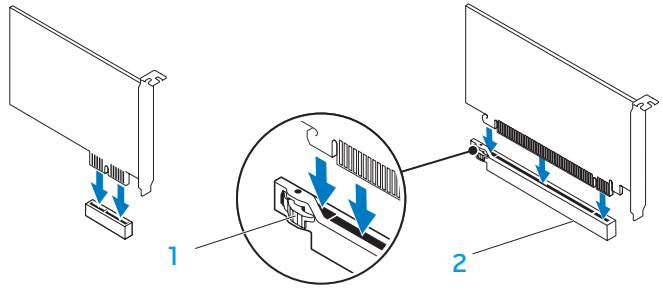

1 securing tab 2 card connector

CHAPTER 7: MEMORY MODULE(S)

You can increase your computer memory by installing memory modules on the system board. See the specifications in your *Desktop Manual* at **support.dell.com/manuals** for information on the type of memory supported by your computer. Install only memory modules that are supported by your computer.

NOTE: Memory modules purchased from Dell or Alienware are covered under your computer warranty.

Memory Module(s)

WARNING: Before working inside your computer, read the safety information that shipped with your computer. For additional safety best practices information, see the Regulatory Compliance Homepage at www.dell.com/regulatory_compliance.

WARNING: Do not operate your computer with any cover(s) (including computer covers, bezels, filler brackets, front-panel inserts, etc.) removed.

WARNING: To guard against electrical shock, always unplug your computer from the electrical outlet before removing the side panel(s).

CAUTION: Only a certified service technician should perform repairs on your computer. Damage due to servicing that is not authorized by Dell™ is not covered by your warranty.

Removing the Memory Module(s)

1. Follow the instructions in "Before You Begin" on page 6.
2. Remove the left side-panel (see "Removing the Left Side-Panel" on page 11).
3. Locate the memory-module connectors on the system board (see "System Board Components" on page 14).

WARNING: The memory module(s) may become very hot during normal operation. Allow the memory module(s) to cool before touching them.

NOTE: For better access to the memory module(s), remove the graphics card if the card is full length.

4. To remove the graphics card, see "Removing the PCI-Express Card(s)" on page 32.
5. Spread apart the securing clips at both ends of the memory-module connector.
6. Lift the memory module off the memory-module connector. If the memory module is difficult to remove, gently ease the memory module back and forth to remove it from the memory-module connector.

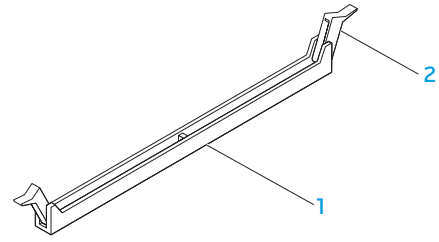

1 memory-module connector 2 securing clips (2)

Replacing the Memory Module(s)

1. Follow the instructions in “Before You Begin” on page 6.

Recommended memory configuration:

Aurora/Aurora ALX

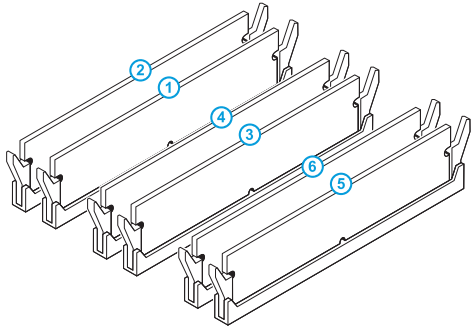

Type	Slots
1066 MHz and 1333 MHz DDR3	Slots 1, 3, and 5 or slots 1 — 6
1600 MHz XMP	Slots 1, 3, and 5

Aurora-R2

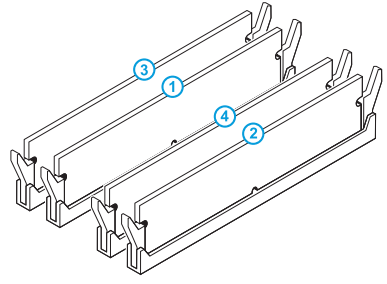

Type	Slots
1066 MHz and 1333 MHz DDR3	Slots 1 and 2 or slots 1 — 4

2. Align the notch on the bottom of the memory module with the tab on the memory-module connector.

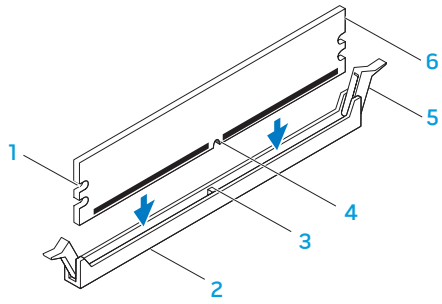

1	cutouts	2	memory-module connector
3	tab	4	notch
5	securing clips (2)	6	memory module

CAUTION: To avoid damage to the memory module, press the memory module straight down into the memory-module connector while you apply equal force to each end of the memory module.

3. Insert the memory module into the memory-module connector until the memory module snaps into position.

   If you insert the memory module correctly, the securing clips snap into the cutouts at each end of the memory module.

NOTE If the memory module is not installed properly, the computer may not boot.

4. To replace the graphics card, see "Replacing the PCI-Express Card(s)" on page 33.
5. Replace the left side-panel (see "Replacing the Left Side-Panel" on page 11).
6. Connect your computer and devices to electrical outlets and then turn them on.

As the computer boots, it detects the additional memory and automatically updates the system configuration information.

To confirm the amount of memory installed in the computer:

Click **Start** → **Control Panel** → **System and Security** → **System**.

CHAPTER 8: FANS

Fans

WARNING: Before working inside your computer, read the safety information that shipped with your computer. For additional safety best practices information, see the Regulatory Compliance Homepage at www.dell.com/regulatory_compliance.

WARNING: To guard against electrical shock, always unplug your computer from the electrical outlet before removing the side panel(s).

WARNING: Do not operate your computer with any cover(s) (including computer covers, bezels, filler brackets, front-panel inserts, etc.) removed.

CAUTION: Only a certified service technician should perform repairs on your computer. Damage due to servicing that is not authorized by Dell™ is not covered by your warranty.

Removing the Hard-Drive Fan Assembly

1. Follow the instructions in “Before You Begin” on page 6.
2. Remove the left side-panel (see “Removing the Left Side-Panel“ on page 11).
3. Open the PCI shroud (see “Opening the PCI Shroud” on page 18).
4. Remove the drive-bay shroud (see “Removing the Drive-Bay Shroud” on page 19).
5. Disconnect the hard-drive fan assembly cable from the connector on the master I/O board. Make note of the cable routing before disconnecting the cable.
6. Lift the hard-drive fan assembly out of the chassis.

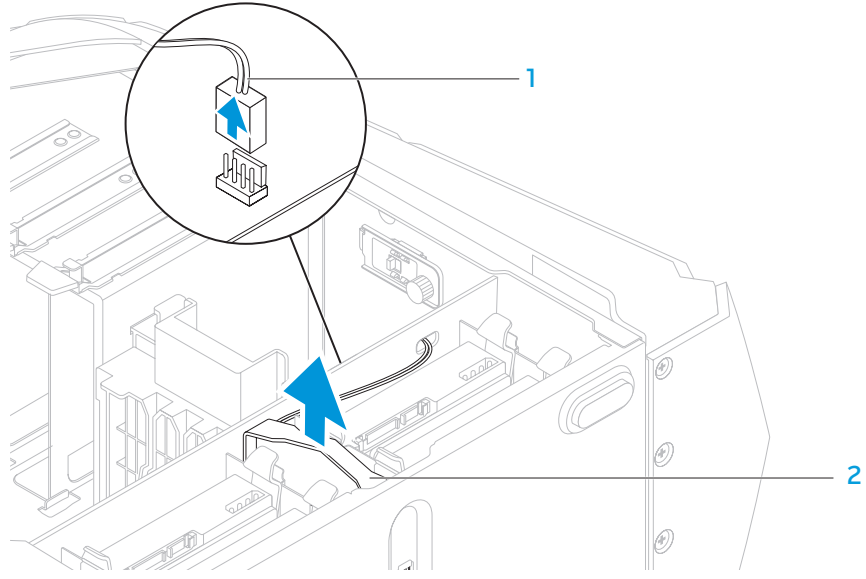

1 hard-drive fan assembly cable

2 hard-drive fan assembly

Replacing the Hard-Drive Fan Assembly

1. Follow the instructions in "Before You Begin" on page 6.
2. Push the hard-drive fan assembly into the hard-drive fan assembly bay.
3. Route the cable through the slot in the hard-drive bay.
4. Connect the hard-drive fan assembly cable to the connector on the master I/O board.
5. Replace the drive-bay shroud (see "Replacing the Drive-Bay Shroud" on page 19).
6. Close the PCI shroud (see "Closing the PCI Shroud" on page 18).
7. Replace the left side-panel (see "Replacing the Left Side-Panel" on page 11).
8. Connect your computer and devices to electrical outlets and then turn them on.

Removing the PCI-Fan Assembly

1. Follow the instructions in “Before You Begin” on page 6.
2. Remove the left side-panel (see “Removing the Left Side-Panel“ on page 11).
3. Open the PCI shroud (see “Opening the PCI Shroud” on page 18).
4. Remove the drive-bay shroud (see “Removing the Drive-Bay Shroud” on page 19).
5. Remove full-length PCI-Express cards, if any (see “Removing the PCI-Express Card(s)” on page 32).
6. Disconnect the PCI-fan assembly cable from the connector on the master I/O board.
7. Press the tabs and lift the PCI-fan assembly out of the chassis.

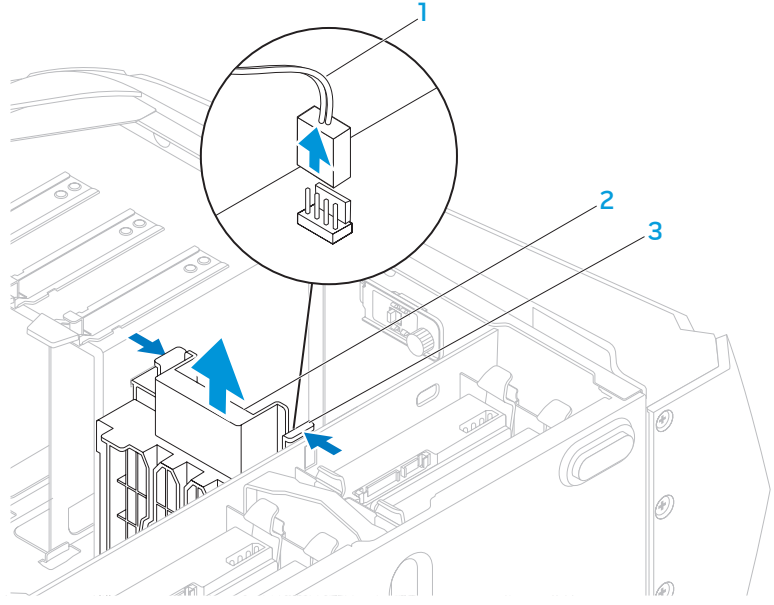

1 PCI-fan assembly cable
2 PCI-fan assembly
3 tabs (2)

Replacing the PCI-Fan Assembly

1. Follow the instructions in "Before You Begin" on page 6.
2. Align the PCI-fan assembly with the metal bracket on the chassis.
3. Slide the PCI-fan assembly into the chassis.
4. Connect the PCI-fan assembly cable to the connector on the master I/O board.
5. Replace full-length PCI-Express cards, if any (see "Replacing the PCI-Express Card(s)" on page 33).
6. Replace the drive-bay shroud (see "Replacing the Drive-Bay Shroud" on page 19).
7. Close the PCI shroud (see "Closing the PCI Shroud" on page 18).
8. Replace the left side-panel (see "Replacing the Left Side-Panel" on page 11).
9. Connect your computer and devices to electrical outlets and then turn them on.

CHAPTER 9: PROCESSOR LIQUID-COOLING ASSEMBLY

Processor Liquid-Cooling Assembly

WARNING: Before working inside your computer, read the safety information that shipped with your computer. For additional safety best practices information, see the Regulatory Compliance Homepage at www.dell.com/regulatory_compliance.

WARNING: To guard against electrical shock, always unplug your computer from the electrical outlet before removing the side panel(s).

WARNING: Do not operate your computer with any cover(s) (including computer covers, bezels, filler brackets, front-panel inserts, etc.) removed.

CAUTION: Only a certified service technician should perform repairs on your computer. Damage due to servicing that is not authorized by Dell™ is not covered by your warranty.

CAUTION: To avoid electrostatic discharge, ground yourself by using a wrist grounding strap or by periodically touching an unpainted metal surface (such as a connector on the back of the computer).

Removing the Processor Liquid-Cooling Assembly

1. Follow the instructions in "Before You Begin" on page 6.
2. Remove the left side-panel (see "Removing the Left Side-Panel" on page 11).

WARNING: Despite having a plastic shield, the processor liquid-cooling assembly may be very hot during normal operation. Ensure that it has had sufficient time to cool before you touch it.

3. Disconnect the processor liquid-cooling assembly cable from the connectors (SYS FAN and CPU PUMP) on the top-lighting board.
4. Loosen the four captive screws that secure the processor liquid-cooling assembly to the system board.
5. Remove the four screws that secure the processor liquid-cooling assembly to the chassis rear wall.
6. Slide and lift the processor liquid-cooling assembly away from the chassis.

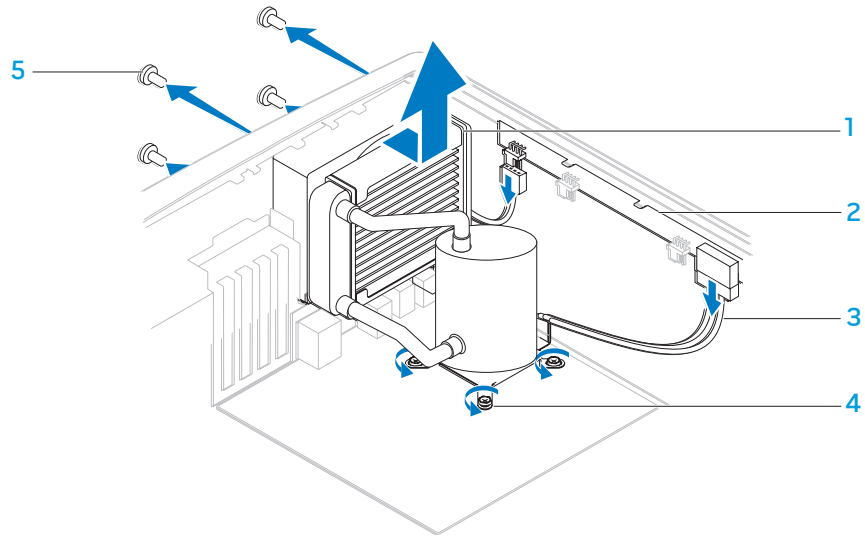

1 processor liquid-cooling assembly
2 top lighting-board
3 cables (2)
4 captive screws (4)
5 screws (4)

Replacing the Processor Liquid-Cooling Assembly

1. Follow the instructions in “Before You Begin” on page 6.
2. Align the screw holes on the processor liquid-cooling assembly with the screw holes on the chassis rear wall.
3. Replace the four screws that secure the processor liquid-cooling assembly to the chassis rear wall.
4. Tighten the four captive screws that secure the processor liquid-cooling assembly to the system board.
5. Connect the processor liquid-cooling assembly cables to the connectors (SYS FAN and CPU PUMP) on the top lighting-board.
6. Replace the left side-panel (see “Replacing the Left Side-Panel“ on page 11).
7. Connect your computer and devices to electrical outlets and then turn them on.

CHAPTER 10: PROCESSOR

Processor

WARNING: Before working inside your computer, read the safety information that shipped with your computer. For additional safety best practices information, see the Regulatory Compliance Homepage at www.dell.com/regulatory_compliance.

WARNING: To guard against electrical shock, always unplug your computer from the electrical outlet before removing the side panel(s).

CAUTION: Only a certified service technician should perform repairs on your computer. Damage due to servicing that is not authorized by Dell™ is not covered by your warranty.

CAUTION: To avoid electrostatic discharge, ground yourself by using a wrist grounding strap or by periodically touching an unpainted metal surface (such as a connector on the back of the computer).

Removing the Processor

1. Follow the instructions in "Before You Begin" on page 6.
2. Remove the left side-panel (see "Removing the Left Side-Panel" on page 11).

WARNING: Despite having a plastic shield, the processor liquid-cooling assembly may be very hot during normal operation. Ensure that it has had sufficient time to cool before you touch it.

3. Remove the processor liquid-cooling assembly (see "Removing the Processor Liquid-Cooling Assembly" on page 48).
4. Press and push the release lever down and out and release it from the tab that secures it.

CAUTION: When removing the processor, do not touch any of the pins inside the socket or allow any objects to fall on the pins in the socket.

5. Open the processor cover and gently lift the processor to remove it from the socket.
6. Leave the release lever extended in the release position so that the socket is ready for the new processor.

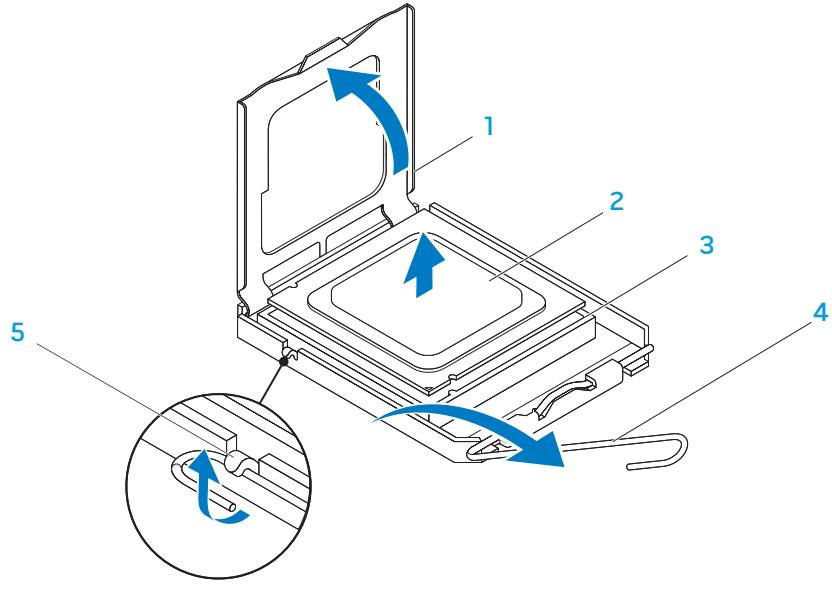

1 processor cover
2 processor
3 socket
4 release lever
5 tab

Replacing the Processor

CAUTION: When replacing the processor, do not touch any of the pins inside the socket or allow any objects to fall on the pins in the socket.

CAUTION: Ground yourself by touching an unpainted metal surface on the back of the computer.

1. Follow the instructions in "Before You Begin" on page 6.
2. Unpack the new processor. Ensure that you do not to touch the underside of the processor.

CAUTION: You must position the processor correctly in the socket to avoid permanent damage to the processor and the computer when you turn on the computer.

3. Extend the release lever on the processor socket if it is not fully extended.

CAUTION: Socket pins are delicate. To avoid damage, ensure that the processor is aligned properly with the socket, and do not use excessive force when you replace the processor. Be careful not to touch or bend the pins on the system board.

4. Align the pin-1 corners of the processor and socket.
5. Set the processor lightly in the socket and ensure that the processor is positioned correctly.

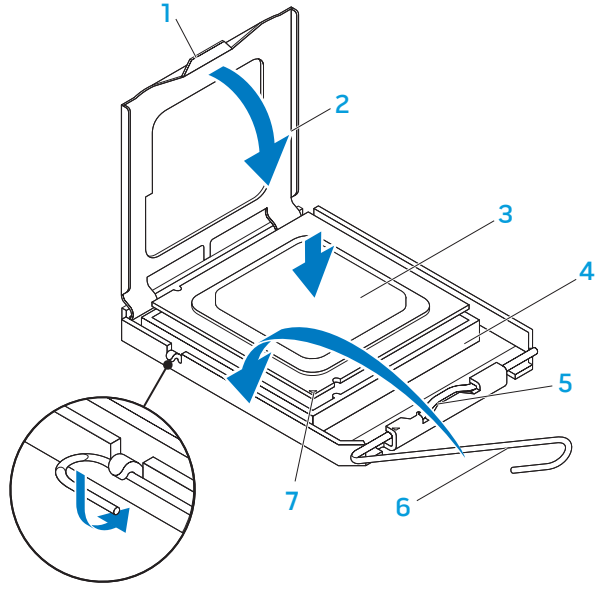

1 tab
2 processor cover
3 processor
4 socket
5 center-cover latch
6 release lever
7 processor pin-1 indicator

6. When the processor is fully seated in the socket, close the processor cover. Ensure that the tab on the processor cover is positioned underneath the center-cover latch on the socket.
7. Pivot the socket release lever back towards the socket, and snap it into place to secure the processor.
8. Clean the thermal grease from the bottom of the processor liquid-cooling assembly.

CAUTION: Ensure that you apply new thermal grease. New thermal grease is critical for ensuring adequate thermal bonding, which is a requirement for optimal processor operation.

9. Apply the new thermal grease to the top of the processor.
10. Replace the processor liquid-cooling assembly (see “Replacing the Processor Liquid-Cooling Assembly” on page 49).

CAUTION: Ensure that the processor liquid-cooling assembly is correctly seated and secured.

11. Replace the left side-panel (see “Replacing the Left Side-Panel“ on page 11).
12. Connect your computer and devices to electrical outlets, and then turn them on.

CHAPTER 11: POWER SUPPLY

Power Supply

WARNING: Before working inside your computer, read the safety information that shipped with your computer. For additional safety best practices information, see the Regulatory Compliance Homepage at www.dell.com/regulatory_compliance.

WARNING: To guard against electrical shock, always unplug your computer from the electrical outlet before removing the side panel(s).

WARNING: Do not operate your computer with any cover(s) (including computer covers, bezels, filler brackets, front-panel inserts, etc.) removed.

CAUTION: Only a certified service technician should perform repairs on your computer. Damage due to servicing that is not authorized by Dell™ is not covered by your warranty.

Removing the Power Supply

1. Follow the instructions in “Before You Begin” on page 6.
2. Remove the left side-panel (see “Removing the Left Side-Panel“ on page 11).
3. Lift the tab and slide the power-supply cover towards the back of the chassis.
4. Lift the power-supply cover away from the chassis.

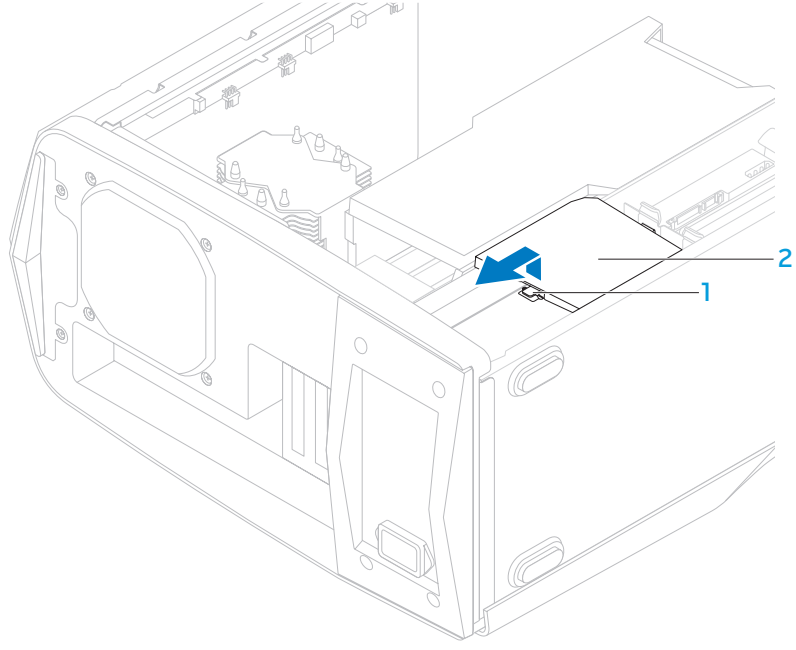

1 tab

2 power-supply cover

5. Disconnect the DC wire harness and the AC power cable from the power supply.
6. Loosen the four captive screws that secure the power supply to the back of the chassis.
7. Slide the power supply through the back of the chassis.

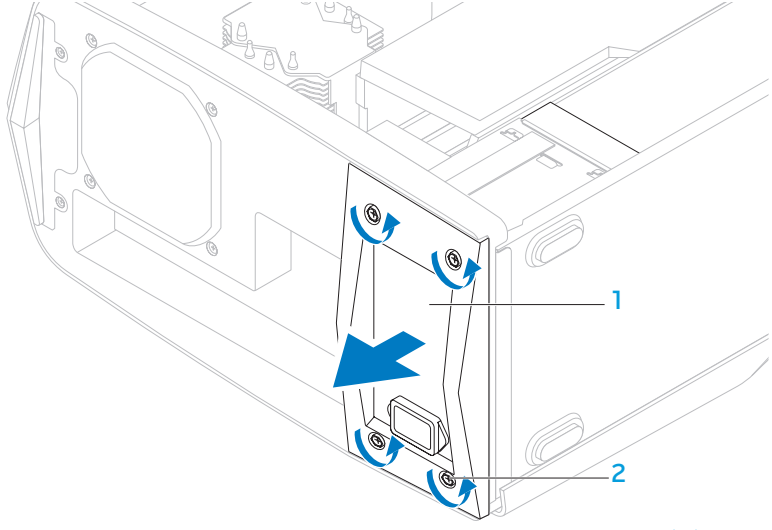

1 power supply

2 captive screws (4)

8. Remove the four screws that secure the power supply to the bezel.
9. Remove the bezel from the power supply.

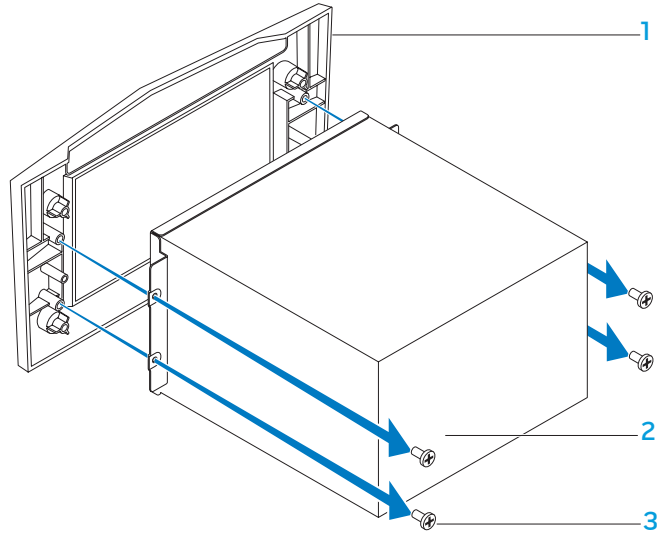

1 bezel

2 power supply

3 screws (4)

Replacing the Power Supply

1. Follow the instructions in “Before You Begin” on page 6.
2. Replace the four screws that secure the power supply to the bezel.
3. Slide the power supply into the chassis through the back of the computer.
4. Tighten the four captive screws that secure the power supply to the back of the chassis.
5. Connect the DC wire harness and the AC power cable to the power supply.
6. Align the tabs on the power-supply cover with the slots on the power supply.
7. Slide the power-supply cover towards the slots until it locks in place.
8. Replace the left side-panel (see “Replacing the Left Side-Panel“ on page 11).
9. Connect your computer and devices to electrical outlets, and then turn them on.

CHAPTER 12: BATTERY

Battery

WARNING: Before working inside your computer, read the safety information that shipped with your computer. For additional safety best practices information, see the Regulatory Compliance Homepage at www.dell.com/regulatory_compliance.

WARNING: Do not operate your computer with any cover(s) (including computer covers, bezels, filler brackets, front-panel inserts, etc.) removed.

WARNING: To guard against electrical shock, always unplug your computer from the electrical outlet before removing the side panel(s).

CAUTION: Only a certified service technician should perform repairs on your computer. Damage due to servicing that is not authorized by Dell™ is not covered by your warranty.

Removing the Coin-Cell Battery

1. Record all the screens in system setup (see "System Setup" on page 107) so that you can restore the correct settings after the new battery has been installed.
2. Follow the instructions in "Before You Begin" on page 6.
3. Remove the left side-panel (see "Removing the Left Side-Panel" on page 11).
4. Open the PCI shroud (see "Opening the PCI Shroud" on page 18).
5. Remove any PCI-Express cards (see "Removing the PCI-Express Card(s)" on page 32).
6. Locate the battery socket (see "System Board Components" on page 14).

CAUTION: If you pry the battery out of its socket with a blunt object, be careful not to touch the system board with the object. Ensure that the object is inserted between the battery and the socket before you attempt to pry out the battery. Otherwise, you may damage the system board by prying off the socket or by breaking circuit traces on the system board.

7. Press the battery release lever to remove the battery.

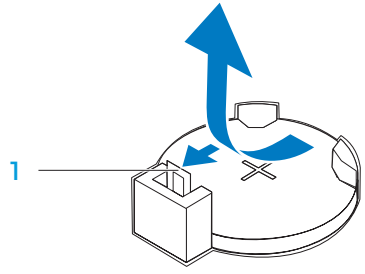

1 battery release lever

Replacing the Coin-Cell Battery

1. Follow the instructions in "Before You Begin" on page 6.
2. Insert the new battery (CR2032) into the socket with the side labeled "+" facing up, and press the battery into place.

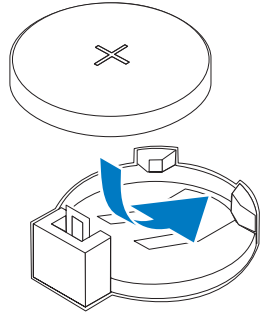

3. Replace the PCI-Express cards (see "Replacing the PCI-Express Card(s)" on page 33).
4. Close the PCI shroud (see "Closing the PCI Shroud" on page 18).
5. Replace the left side-panel (see "Replacing the Left Side-Panel" on page 11).
6. Connect your computer and devices to electrical outlets and then turn them on.
7. Enter system setup (see "Entering System Setup" on page 107) and restore the settings you recorded before removing the battery.

Removing the Theater-Lighting Batteries

1. Follow the instructions in “Before You Begin” on page 6.
2. Remove the left side-panel (see “Removing the Left Side-Panel“ on page 11).
3. Open the PCI shroud (see “Opening the PCI Shroud“ on page 18).
4. Remove the drive-bay shroud (see “Removing the Drive-Bay Shroud” on page 19).
5. Turn the drive-bay shroud over.
6. Open the theater-lighting battery compartment door.
7. Remove the two batteries (AA rechargeable) from the theater-lighting battery compartment.

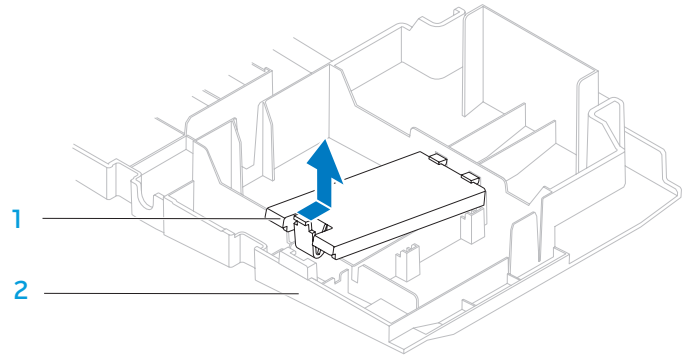

1 theater-lighting battery-compartment door

2 drive-bay shroud

Replacing the Theater-Lighting Batteries

1. Follow the instructions in "Before You Begin" on page 6.
2. Insert the two new batteries (AA rechargeable) in the theater-lighting battery compartment.
3. Close the theater-lighting battery-compartment door.
4. Replace the drive-bay shroud (see "Replacing the Drive-Bay Shroud" on page 19).
5. Close the PCI shroud (see "Closing the PCI Shroud" on page 18).
6. Replace the left side-panel (see "Replacing the Left Side-Panel" on page 11).
7. Connect your computer and devices to electrical outlets, and then turn them on.

CHAPTER 13: SYSTEM BOARD

System Board

WARNING: Before working inside your computer, read the safety information that shipped with your computer. For additional safety best practices information, see the Regulatory Compliance Homepage at www.dell.com/regulatory_compliance.

WARNING: Do not operate your computer with any cover(s) (including computer covers, bezels, filler brackets, front-panel inserts, etc.) removed.

WARNING: To guard against electrical shock, always unplug your computer from the electrical outlet before removing the side panel(s).

CAUTION: Only a certified service technician should perform repairs on your computer. Damage due to servicing that is not authorized by Dell™ is not covered by your warranty.

Removing the System Board

1. Record all the screens in system setup (see "System Setup" on page 107) so that you can restore the correct settings.
2. Follow the instructions in "Before You Begin" on page 6.
3. Remove the left side-panel (see "Removing the Left Side-Panel" on page 11).
4. Open the PCI shroud (see "Opening the PCI Shroud" on page 18).
5. Remove any PCI-Express cards (see "Removing the PCI-Express Card(s)" on page 32).

WARNING: Despite having a plastic shield, the processor liquid-cooling assembly may be very hot during normal operation. Ensure that it has had sufficient time to cool before you touch it.

6. Remove the processor liquid-cooling assembly (see "Removing the Processor Liquid-Cooling Assembly" on page 48).
7. Remove the processor (see "Removing the Processor" on page 52).
8. Remove the memory modules (see "Removing the Memory Module(s)" on page 37).

CAUTION: Carefully note the routing and location of each cable before you disconnect it, so that you are sure to re-route the cables correctly. An incorrectly routed or a disconnected cable could lead to computer problems.

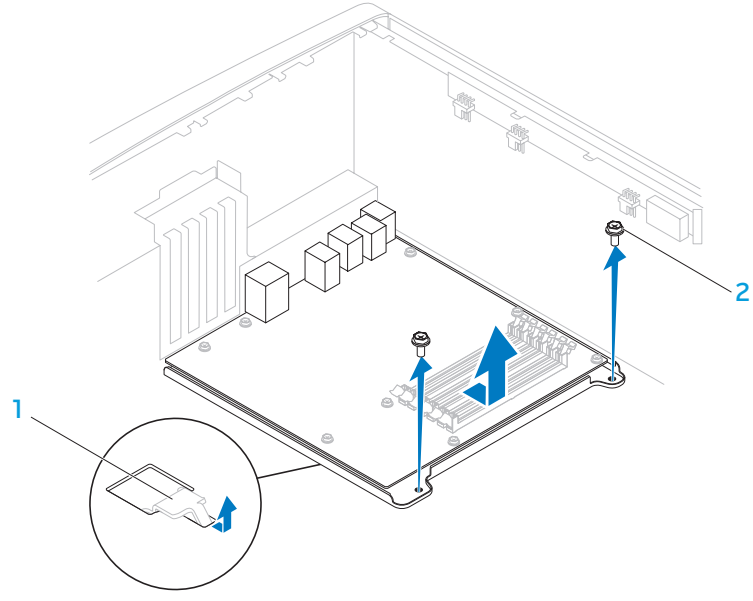

1 latch 2 screws (2)

9. Disconnect all cables from the system board.
10. Remove the two screws that secure the system board to the chassis.
11. Slide the system board towards the front of the chassis to disengage it from the latches that secure it to the chassis.
12. Lift the system board out of the chassis.

Replacing the System Board

1. Follow the instructions in "Before You Begin" on page 6.
2. Slide the system board towards the back of the chassis and engage the latches that secure it to the chassis.
3. Replace the two screws that secure the system board to the chassis.
4. Route and connect the cables that you disconnected from the system board.

NOTE: For information on system board connectors, see "System Board Components" on page 14.

5. Replace the memory modules (see "Replacing the Memory Module(s)" on page 38).
6. Replace the processor (see "Replacing the Processor" on page 53).
7. Replace the processor liquid-cooling assembly (see "Replacing the Processor Liquid-Cooling Assembly" on page 49).
8. Replace the PCI-Express cards (see "Replacing the PCI-Express Card(s)" on page 33).
9. Close the PCI shroud (see "Closing the PCI Shroud" on page 18).
10. Replace the left side-panel (see "Replacing the Left Side-Panel" on page 11).
11. Connect your computer and devices to electrical outlets, and then turn them on.

CHAPTER 14: MASTER I/O BOARD

Master I/O Board

WARNING: Before working inside your computer, read the safety information that shipped with your computer. For additional safety best practices information, see the Regulatory Compliance Homepage at www.dell.com/regulatory_compliance.

WARNING: To guard against electrical shock, always unplug your computer from the electrical outlet before removing the side panel(s).

WARNING: Do not operate your equipment with any cover(s) (including side panels, bezels, filler brackets, front-panel inserts, etc.) removed.

CAUTION: Only a certified service technician should perform repairs on your computer. Damage due to servicing that is not authorized by Dell™ is not covered by your warranty.

CAUTION: To avoid electrostatic discharge, ground yourself by using a wrist grounding strap or by periodically touching an unpainted metal surface (such as a connector on the back of the computer).

Removing the Master I/O Board

1. Follow the instructions in “Before You Begin” on page 6.
2. Remove the left side-panel (see “Removing the Left Side-Panel“ on page 11).
3. Open the PCI shroud (see “Opening the PCI Shroud“ on page 18).
4. Remove the drive-bay shroud (see “Removing the Drive-Bay Shroud” on page 19).
5. Remove the PCI-fan assembly (see “Removing the PCI-Fan Assembly” on page 44).
6. Disconnect all cables from the connectors on the master I/O board. Note the routing of all cables as you remove them so that you can re-route them correctly after installing the new master I/O board.
7. Remove the four screws that secure the master I/O board to the chassis.
8. Remove the master I/O board out of the chassis.

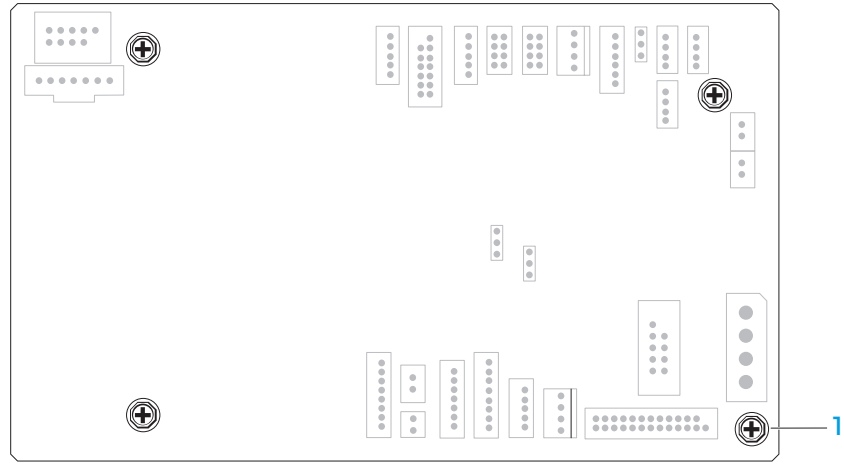

1 screws (4)

Replacing the Master I/O Board

1. Follow the instructions in "Before You Begin" on page 6.
2. Place the master I/O board in the chassis.
3. Replace the four screws that secure the master I/O board to the chassis.
4. Route and connect the cables that you removed from the connectors on the master I/O board.

NOTE: For information on master I/O board connectors, see "Master I/O Board Components" on page 15.

5. Replace the PCI-fan assembly (see "Replacing the PCI-Fan Assembly" on page 45).
6. Replace the drive-bay shroud (see "Replacing the Drive-Bay Shroud" on page 19).
7. Close the PCI shroud (see "Closing the PCI Shroud" on page 18).
8. Replace the left side-panel (see "Replacing the Left Side-Panel" on page 11).
9. Connect your computer and devices to electrical outlets, and then turn them on.

CHAPTER 15: TOP LIGHTING-BOARD

Top Lighting-Board

WARNING: Before working inside your computer, read the safety information that shipped with your computer. For additional safety best practices information, see the Regulatory Compliance Homepage at www.dell.com/regulatory_compliance.

WARNING: To guard against electrical shock, always unplug your computer from the electrical outlet before removing the side panel(s).

CAUTION: Only a certified service technician should perform repairs on your computer. Damage due to servicing that is not authorized by Dell™ is not covered by your warranty.

CAUTION: Do not operate your computer with any cover(s) (including computer covers, bezels, filler brackets, front-panel inserts, etc.) removed.

Removing the Top Lighting-Board

1. Follow the instructions in “Before You Begin” on page 6.
2. Remove the left side-panel (see “Removing the Left Side-Panel“ on page 11).
3. Disconnect all cables from the connectors on the top lighting-board.
4. Remove the four screws that secure the top lighting-board to the chassis.
5. Pull the top lighting-board away from the chassis.

Replacing the Top Lighting-Board

1. Follow the instructions in “Before You Begin” on page 6.
2. Replace the four screws that secure the top lighting-board to the chassis.
3. Connect the cables to the connectors on the top lighting-board.
4. Replace the left side-panel (see “Replacing the Left Side-Panel“ on page 11).
5. Connect your computer and devices to electrical outlets and then turn them on.

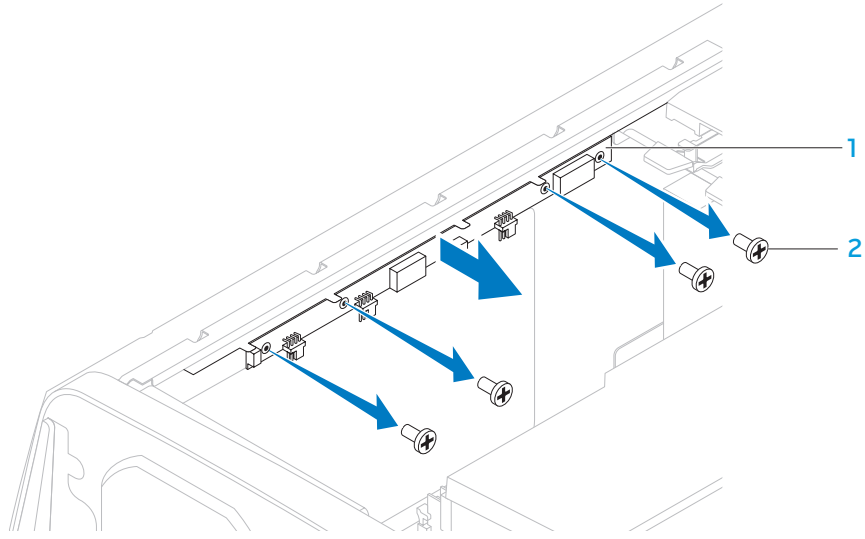

1 top lighting-board 2 screws (4)

ᓴᐯᓯᑕᐱᐊᒥ ᕿᑦ: ᒥᕕᓱᐯᐱ ᐃᕕᖅᐊ ᑕᓯᑕᐊᓚ

CHAPTER 16: RIGHT SIDE-PANEL(S)

Right Side-Panel(s)

WARNING: Before working inside your computer, read the safety information that shipped with your computer. For additional safety best practices information, see the Regulatory Compliance Homepage at www.dell.com/regulatory_compliance.

WARNING: Do not operate your computer with any cover(s) (including computer covers, bezels, filler brackets, front-panel inserts, etc.) removed.

WARNING: To guard against electrical shock, always unplug your computer from the electrical outlet before removing the side panel(s).

CAUTION: Only a certified service technician should perform repairs on your computer. Damage due to servicing that is not authorized by Dell™ is not covered by your warranty.

Removing the Right Side-Panel(s)

1. Follow the instructions in "Before You Begin" on page 6.
2. Remove the left side-panel (see "Removing the Left Side-Panel" on page 11).
3. Open the PCI shroud (see "Opening the PCI Shroud" on page 18).
4. Remove the drive-bay shroud (see "Removing the Drive-Bay Shroud" on page 19).
5. Remove the power-supply cover (see "Removing the Power Supply" on page 57).
6. Remove the hard-drive fan assembly (see "Removing the Hard-Drive Fan Assembly" on page 42).
7. Remove the three screws that secure the right side-panel(s) to the chassis.

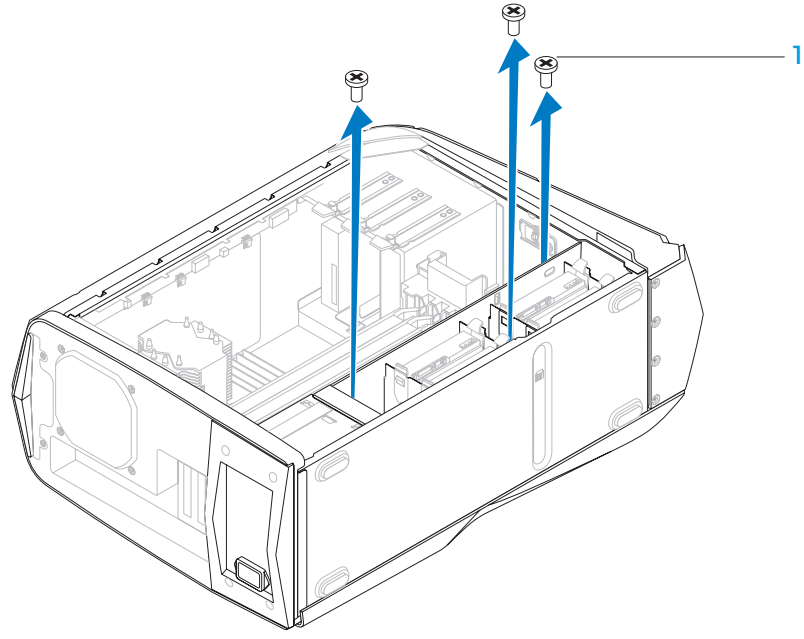

1 screws (3)

8. Place the chassis in an upright position.
9. Slide and pull the right top-panel away from the chassis.

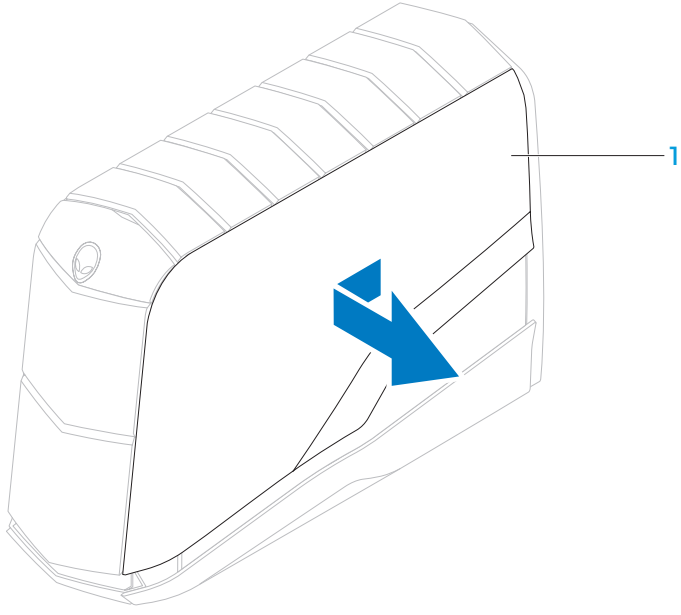

1 right top-panel

10. Disconnect the lighting-board cable from the connector on the master I/O board.
11. Remove the two screws that secure the lighting board to the chassis.
12. Lift the lighting board up and away from the chassis.

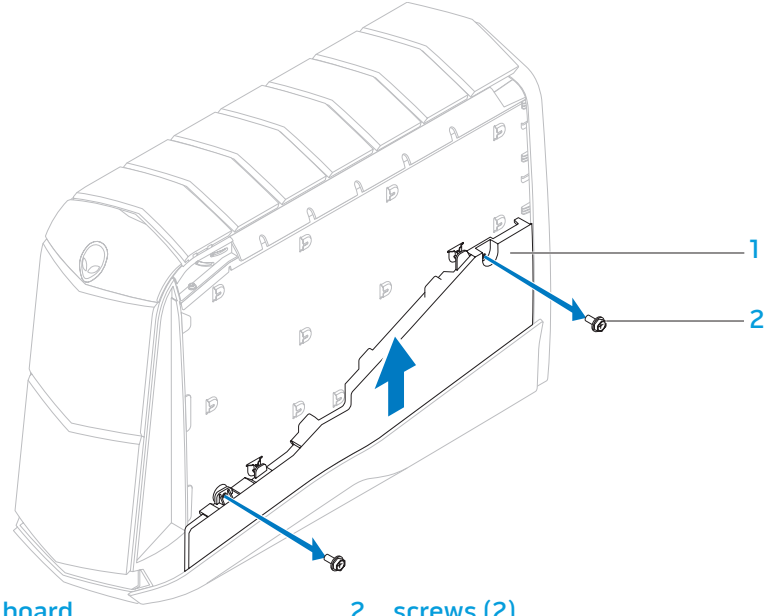

1 lighting board

2 screws (2)

13. Slide and pull the right bottom-panel away from the chassis.

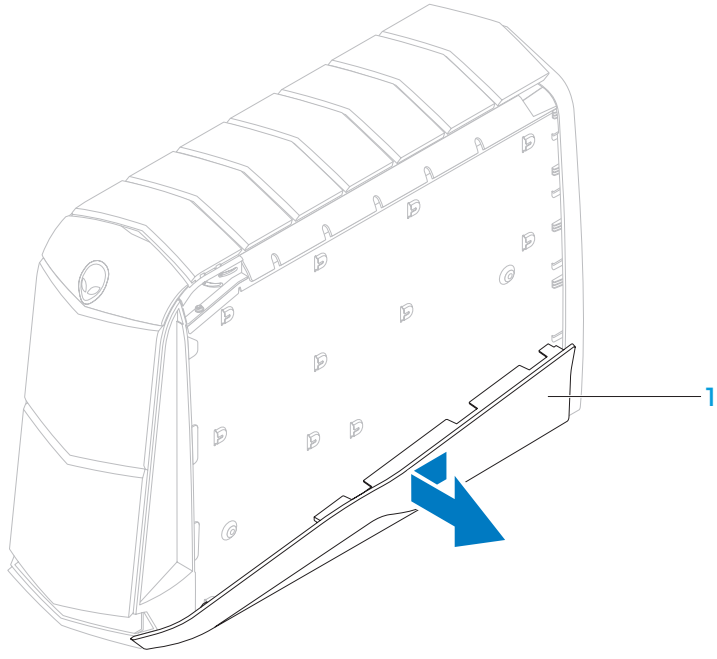

1 right bottom-panel

Replacing the Right Side-Panel(s)

1. Follow the instructions in "Before You Begin" on page 6.
2. Align the right bottom-panel to the bottom of the computer and slide it into position.
3. Slide the lighting board into position and replace the two screws that secure the lighting board to the chassis.
4. Connect the lighting-board cable to the connector on the master I/O board.
5. Slide the right top-panel into position.
6. Place the chassis on its side.
7. Replace the three screws that secure the right side-panel(s) to the chassis.
8. Replace the power-supply cover (see "Replacing the Power Supply" on page 59).
9. Replace the hard-drive fan assembly (see "Replacing the Hard-Drive Fan Assembly" on page 43).
10. Replace the drive-bay shroud (see "Replacing the Drive-Bay Shroud" on page 19).
11. Close the PCI shroud (see "Closing the PCI Shroud" on page 18).
12. Replace the left side-panel (see "Replacing the Left Side-Panel" on page 11).
13. Connect your computer and devices to electrical outlets and then turn them on.

CHAPTER 17: ACTIVE-VENTING ASSEMBLY

Active-Venting Assembly

WARNING: Before working inside your computer, read the safety information that shipped with your computer. For additional safety best practices information, see the Regulatory Compliance Homepage at www.dell.com/regulatory_compliance.

WARNING: Do not operate your computer with any cover(s) (including computer covers, bezels, filler brackets, front-panel inserts, etc.) removed.

WARNING: To guard against electrical shock, always unplug your computer from the electrical outlet before removing the side panel(s).

CAUTION: Only a certified service technician should perform repairs on your computer. Damage due to servicing that is not authorized by Dell™ is not covered by your warranty.

Removing the Active-Venting Assembly

NOTE: Active-venting assembly is available only in Alienware Aurora ALX.

1. Follow the instructions in "Before You Begin" on page 6.
2. Remove the left side-panel (see "Removing the Left Side-Panel" on page 11).
3. Open the PCI shroud (see "Opening the PCI Shroud" on page 18).
4. Remove the drive-bay shroud (see "Removing the Drive-Bay Shroud" on page 19).
5. Remove the screw that secures the right top-panel to the chassis.

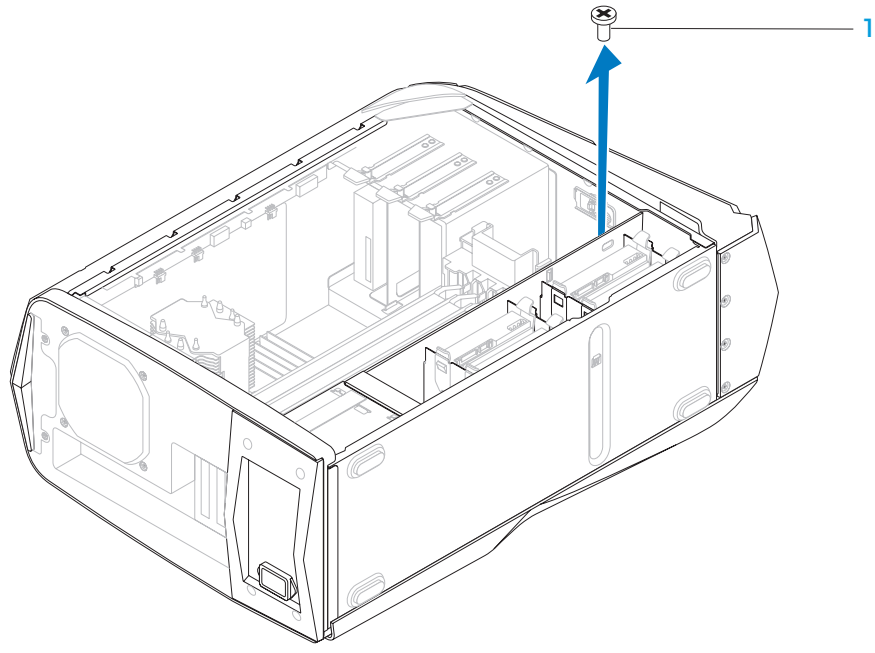

1 screw

6. Remove the top lighting-board (see "Removing the Top Lighting-Board" on page 76).
7. Remove the ten screws that secure the active-venting assembly to the chassis.

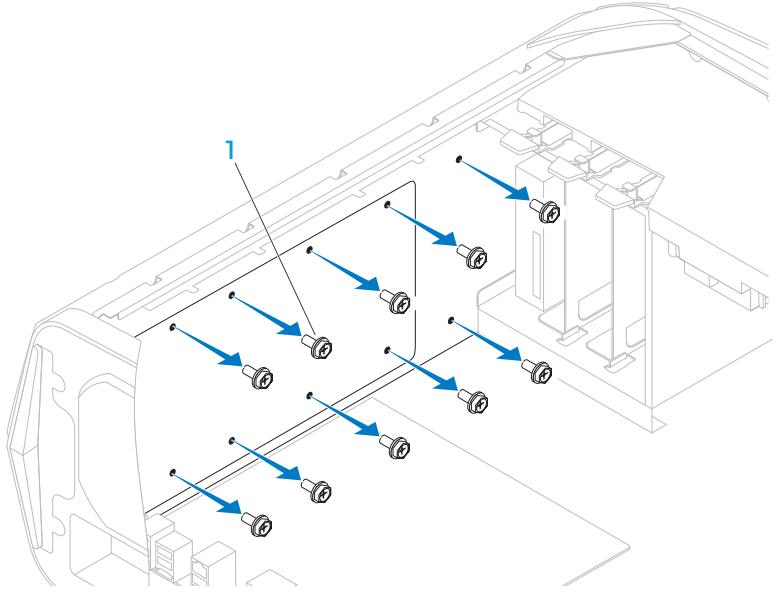

1 screws (10)

8. Place the chassis in an upright position.
9. Remove the right top-panel.

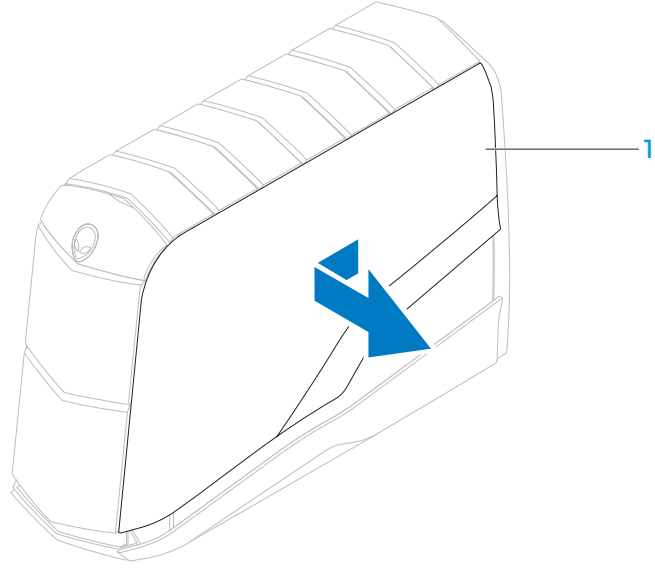

1 right top-panel

10. Remove the two screws that secure the top panel to the chassis.
11. Lift the top panel away from the chassis.
12. Remove the three screws that secure the active-venting assembly to the chassis.
13. Disconnect the cables that connect the active-venting assembly to the connectors on the master I/O board.
14. Lift the active-venting assembly away from the chassis.

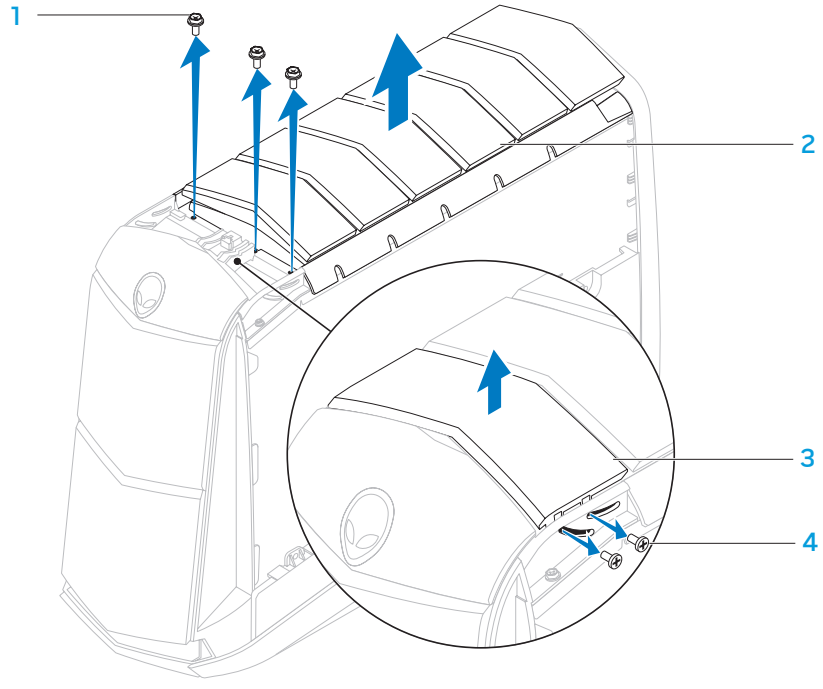

1 screws (3)
2 active-venting assembly
3 top panel
4 top-panel screws (2)

Replacing the Active-Venting Assembly

1. Follow the instructions in "Before You Begin" on page 6.
2. Place the active-venting assembly on the top of the chassis.
3. Connect the active-venting assembly cables to the connectors on the master I/O board.
4. Replace the three screws that secure the active-venting assembly to the chassis.
5. Align the top panel with the slots in the chassis and replace the two screws that secure the top panel to the chassis.
6. Replace the right top-panel.
7. Lay the chassis on its side.
8. Replace the ten screws that secure the active-venting assembly to the top of the chassis.
9. Replace the top lighting-board (see "Replacing the Top Lighting-Board" on page 76).
10. Replace the screw that secures the right top-panel to the chassis.
11. Replace the drive-bay shroud (see "Replacing the Drive-Bay Shroud" on page 19).
12. Close the PCI shroud (see "Closing the PCI Shroud" on page 18).
13. Replace the left side-panel (see "Replacing the Left Side-Panel" on page 11).
14. Connect your computer and devices to electrical outlets and then turn them on.

CHAPTER 18: FRONT BEZEL

Front Bezel

WARNING: Before working inside your computer, read the safety information that shipped with your computer. For additional safety best practices information, see the Regulatory Compliance Homepage at www.dell.com/regulatory_compliance.

WARNING: Do not operate your computer with any cover(s) (including computer covers, bezels, filler brackets, front-panel inserts, etc.) removed.

WARNING: To guard against electrical shock, always unplug your computer from the electrical outlet before removing the side panel(s).

CAUTION: Only a certified service technician should perform repairs on your computer. Damage due to servicing that is not authorized by Dell™ is not covered by your warranty.

Removing the Front Bezel

1. Follow the instructions in “Before You Begin” on page 6.
2. Remove the left side-panel (see “Removing the Left Side-Panel“ on page 11).
3. Open the PCI shroud (see “Opening the PCI Shroud“ on page 18).
4. Remove the drive-bay shroud (see “Removing the Drive-Bay Shroud” on page 19).
5. Remove the right side-panel(s) (see “Removing the Right Side-Panel(s)” on page 79).
6. Remove the seven screws that secure the front bezel to the chassis.
7. Disconnect the front bezel cables from the connectors on the master I/O board. Note the cable routing before disconnecting the cables.

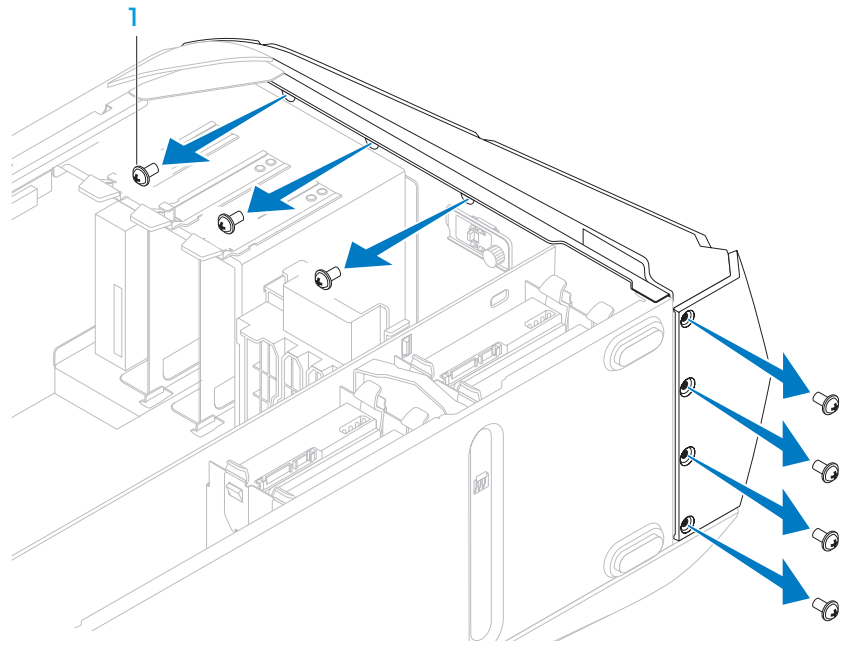

1 screws (7)

8. Place the chassis in an upright position.
9. Remove the three screws on the right side that secure the front bezel to the chassis.
10. Pull the front bezel away from the chassis.

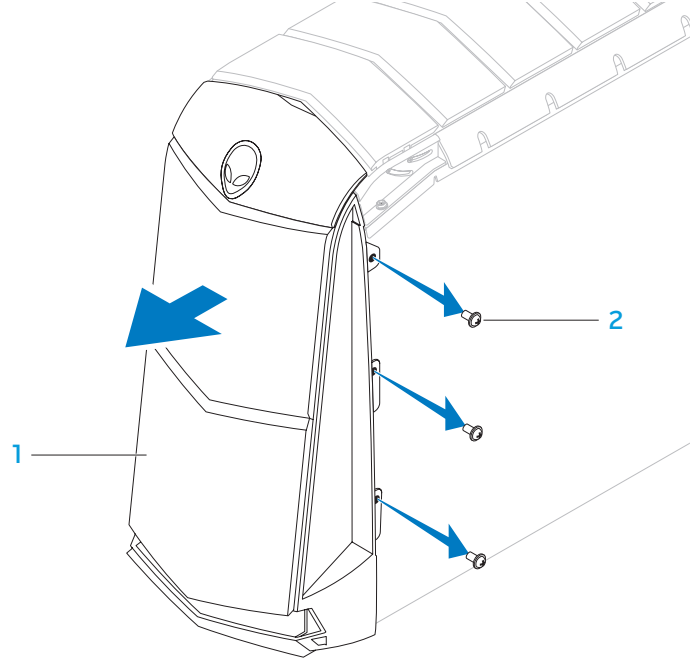

1 front bezel

2 screws (3)

Replacing the Front Bezel

1. Follow the instructions in “Before You Begin” on page 6.
2. Align the front bezel with the front of the chassis.
3. Replace the three screws on the right side that secure the front bezel to the chassis.
4. Lay the chassis on its side.
5. Connect the front-bezel cables to the connectors on the master I/O board.
6. Replace the seven screws that secure the front bezel to the chassis.
7. Replace the right side-panel(s) (see “Replacing the Right Side-Panel(s)” on page 81).
8. Replace the drive-bay shroud (see “Replacing the Drive-Bay Shroud” on page 19).
9. Close the PCI shroud (see “Closing the PCI Shroud“ on page 18).
10. Replace the left side-panel (see “Replacing the Left Side-Panel“ on page 11).
11. Connect your computer and devices to electrical outlets and then turn them on.

CHAPTER 19: BACK BEZEL

Back Bezel

WARNING: Before working inside your computer, read the safety information that shipped with your computer. For additional safety best practices information, see the Regulatory Compliance Homepage at www.dell.com/regulatory_compliance.

WARNING: Do not operate your computer with any cover(s) (including computer covers, bezels, filler brackets, front-panel inserts, etc.) removed.

WARNING: To guard against electrical shock, always unplug your computer from the electrical outlet before removing the side panel(s).

CAUTION: Only a certified service technician should perform repairs on your computer. Damage due to servicing that is not authorized by Dell™ is not covered by your warranty.

Removing the Back Bezel

1. Follow the instructions in "Before You Begin" on page 6.
2. Remove the left side-panel (see "Removing the Left Side-Panel" on page 11).
3. Remove the power supply (see "Removing the Power Supply" on page 57).

WARNING: Despite having a plastic shield, the processor liquid-cooling assembly may be very hot during normal operation. Ensure that it has had sufficient time to cool before you touch it.

4. Remove the processor liquid-cooling assembly (see "Removing the Processor Liquid-Cooling Assembly" on page 48).
5. Remove the two screws that secure the security lock panel to the chassis.
6. Pull the security lock panel away from the chassis.

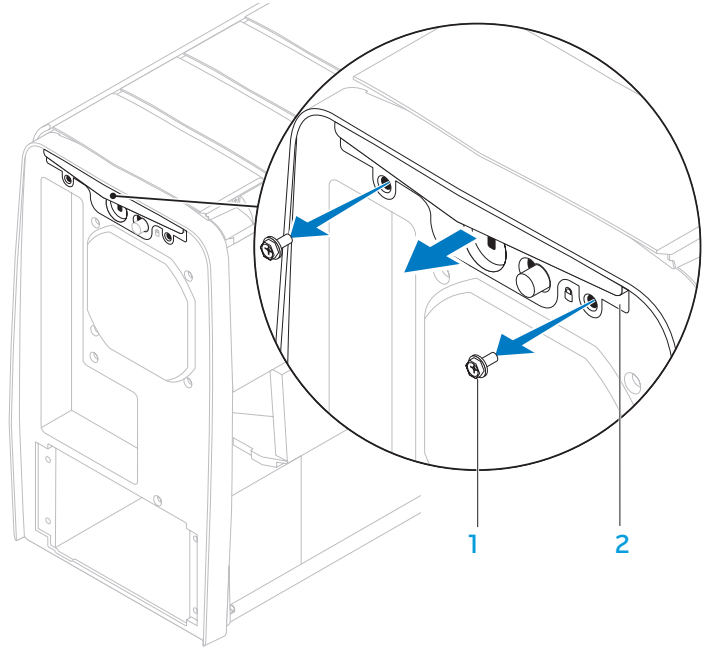

1 screws (2)

2 security lock panel

7. Remove the two screws that secure the back bezel to the chassis.
8. Release the tabs that secure the back bezel to the chassis.
9. Pull the back bezel away from the chassis.

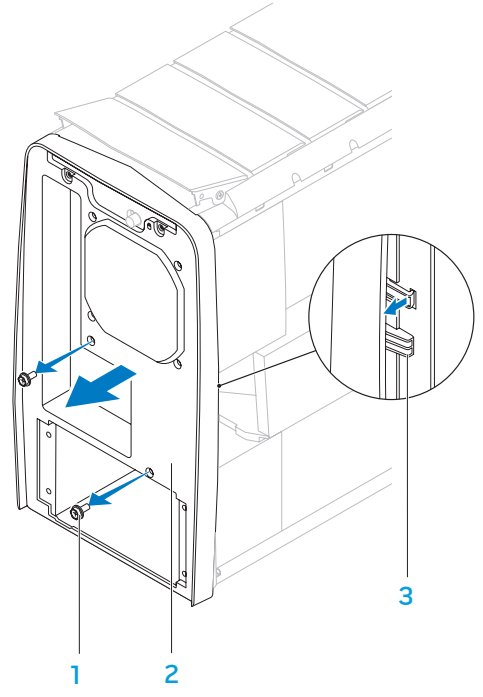

1 screws (2)
2 back bezel
3 tabs

Replacing the Back Bezel

1. Follow the instructions in “Before You Begin” on page 6.
2. Align the tabs on the back bezel with the slots on the chassis.
3. Push the back bezel into place.
4. Replace the two screws that secure the back bezel to the chassis.
5. Replace the two screws that secure the security lock panel to the chassis.
6. Replace the processor liquid-cooling assembly (see “Replacing the Processor Liquid-Cooling Assembly“ on page 49).
7. Replace the power supply (see “Replacing the Power Supply“ on page 59).
8. Replace the left side-panel (see “Replacing the Left Side-Panel“ on page 11).
9. Connect your computer and devices to electrical outlets, and then turn them on.

CHAPTER 20: BLUETOOTH ASSEMBLY

Bluetooth Assembly

WARNING: Before working inside your computer, read the safety information that shipped with your computer. For additional safety best practices information, see the Regulatory Compliance Homepage at www.dell.com/regulatory_compliance.

WARNING: Do not operate your computer with any cover(s) (including computer covers, bezels, filler brackets, front-panel inserts, etc.) removed.

WARNING: To guard against electrical shock, always unplug your computer from the electrical outlet before removing the side panel(s).

CAUTION: Only a certified service technician should perform repairs on your computer. Damage due to servicing that is not authorized by Dell™ is not covered by your warranty.

Removing the Bluetooth Assembly

NOTE: The Bluetooth® assembly is available on your computer only if you ordered it while purchasing your computer.

1. Follow the instructions in "Before You Begin" on page 6.
2. Remove the left side-panel (see "Removing the Left Side-Panel" on page 11).
3. Open the PCI shroud (see "Opening the PCI Shroud" on page 18).
4. Remove the drive-bay shroud (see "Removing the Drive-Bay Shroud" on page 19).
5. Disconnect the Bluetooth assembly cable from the connector on the master I/O board.
6. Loosen the thumbscrew that secures the Bluetooth assembly to the chassis.
7. Slide and pull the Bluetooth assembly away from the front of the chassis.

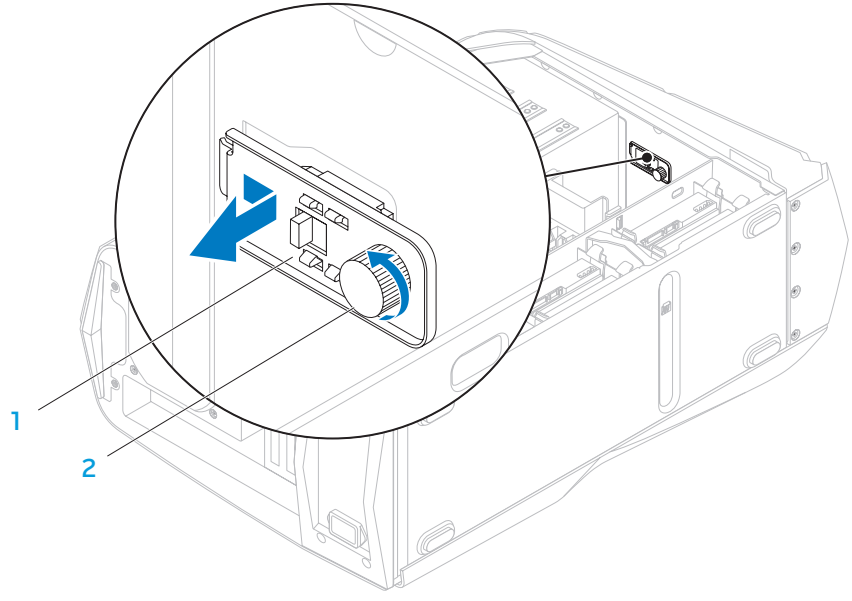

1 Bluetooth assembly 2 thumbscrew

Replacing the Bluetooth Assembly

1. Follow the instructions in “Before You Begin” on page 6.
2. Align the tabs on the Bluetooth assembly with the slots on the chassis.
3. Tighten the thumbscrew that secures the Bluetooth assembly to the chassis.
4. Connect the Bluetooth assembly cable to the connector on the master I/O board.
5. Replace the drive-bay shroud (see “Replacing the Drive-Bay Shroud” on page 19).
6. Close the PCI shroud (see “Closing the PCI Shroud“ on page 18).
7. Replace the left side-panel (see “Replacing the Left Side-Panel” on page 11).
8. Connect your computer and devices to electrical outlets and then turn them on.

CHAPTER 21: TOP I/O PANEL

Top I/O Panel

WARNING: Before working inside your computer, read the safety information that shipped with your computer. For additional safety best practices information, see the Regulatory Compliance Homepage at www.dell.com/regulatory_compliance.

WARNING: Do not operate your computer with any cover(s) (including computer covers, bezels, filler brackets, front-panel inserts, etc.) removed.

WARNING: To guard against electrical shock, always unplug your computer from the electrical outlet before removing the side panel(s).

CAUTION: Only a certified service technician should perform repairs on your computer. Damage due to servicing that is not authorized by Dell™ is not covered by your warranty.

Removing the Top I/O Panel

1. Follow the instructions in “Before You Begin” on page 6.
2. Remove the left side-panel (see “Removing the Left Side-Panel“ on page 11).
3. Open the PCI shroud (see “Opening the PCI Shroud“ on page 18).
4. Remove the drive-bay shroud (see “Removing the Drive-Bay Shroud” on page 19).
5. Remove the PCI-fan assembly (see “Removing the PCI-Fan Assembly” on page 44).
6. Remove any PCI-Express cards (see “Removing the PCI-Express Card(s)” on page 32).
7. Remove the active-venting assembly (see “ Removing the Active-Venting Assembly” on page 84).
8. Remove the right side-panel(s) (see “Removing the Right Side-Panel(s)” on page 79).
9. Remove the front bezel (see “Removing the Front Bezel” on page 90).
10. Pull the panel insert away from the chassis.
11. Remove the four screws that secure the top I/O panel to the chassis.
12. Disconnect the top I/O panel cables from the connectors on the system board and master I/O board.
13. Remove the top I/O panel.

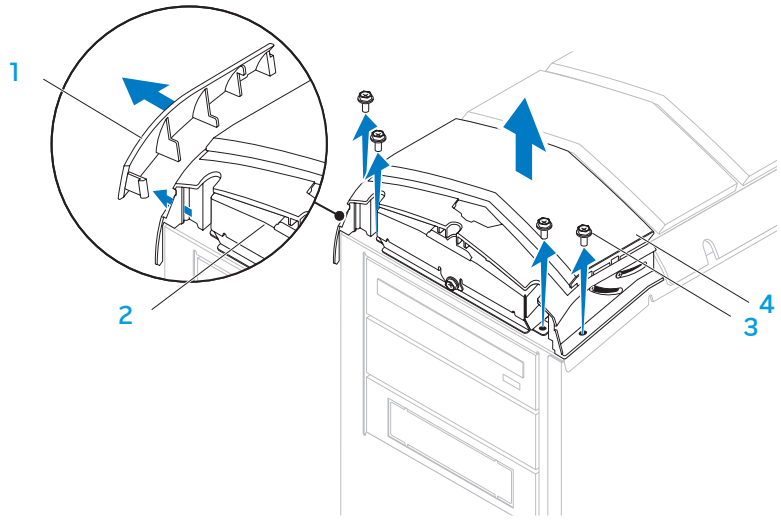

1 panel insert
2 top I/O panel
3 screws (4)
4 top panel

Replacing the Top I/O Panel

1. Follow the instructions in "Before You Begin" on page 6.
2. Align and replace the top I/O panel.
3. Connect the top I/O panel cables to the connectors on the system board and master I/O board.
4. Replace the four screws that secure the top I/O panel to the chassis.
5. Push the panel insert into position.
6. Replace the front bezel (see "Replacing the Front Bezel" on page 92).
7. Replace the active-venting assembly (see "Replacing the Active-Venting Assembly" on page 87).
8. Replace the right side-panel(s) (see "Replacing the Right Side-Panel(s)" on page 81).
9. Replace the PCI-Express cards (see "Replacing the PCI-Express Card(s)" on page 33).
10. Replace the PCI-fan assembly (see "Replacing the PCI-Fan Assembly" on page 45).
11. Replace the drive-bay shroud (see "Replacing the Drive-Bay Shroud" on page 19).
12. Close the PCI shroud (see "Closing the PCI Shroud" on page 18).
13. Replace the left side-panel (see "Replacing the Left Side-Panel" on page 11).
14. Connect your computer and devices to electrical outlets and then turn them on.

CHAPTER 22: SYSTEM SETUP

Configuring the BIOS

System Setup

The System Setup options allow you to:

- Change the system configuration information after you add, change, or remove any hardware in your computer.
- Set or change a user-selectable option.
- View the amount of memory installed.
- Set the type of hard drive installed.

Before you change the System Setup settings, it is recommended that you write down the current System Setup information for future reference.

CAUTION: Do not change the settings in System Setup unless you are an expert computer user. Certain changes can cause your computer to work incorrectly.

Entering System Setup

1. Turn on (or restart) your computer.

NOTE: Keyboard failure may result when a key on the keyboard is held down for extended periods of time. To avoid possible keyboard failure, press and release <F2> in even intervals until the System Setup screen appears.

2. While the computer is booting, press <F2> immediately before the operating system logo appears to access the **BIOS Setup Utility**.

NOTE: If an error occurs during POST (Power On Self Test), press <F2> when the prompt appears to enter the **BIOS Setup Utility.**

NOTE: If you wait too long and the operating system logo appears, continue to wait until you see the Microsoft® Windows® desktop, then shut down your desktop and try again.

System Setup Screens

The **BIOS Setup Utility** displays current or changeable configuration information for your desktop.

Key functions appear at the bottom of the **BIOS Setup Utility** screen and lists keys and their functions within the active field.

System Setup Options

NOTE: The items listed in this section may or may not appear exactly as listed depending on your computer model and installed devices.

System Information

Product Name	Displays the product name.
BIOS Version	Displays the BIOS version number and date information.
Service Tag	Displays the service tag of the computer.
Asset Tag	Displays the asset tag of the computer.
Memory Installed	Displays the amount of memory installed on the computer.
Memory Available	Displays the amount of memory available on the computer.
Memory Technology	Displays the type of memory technology used.
Memory Speed	Displays the memory speed.
CPU ID/u Code ID	Displays the processor type.
CPU Speed	Displays the processor speed.

System Information

Current (QPI) Speed (available on Aurora and Aurora ALX only)	Displays the QPI speed.
Current (DMI) Speed (available on Aurora-R2 only)	Displays the DMI speed.
Cache L2	Displays the processor L2 cache size.
Cache L3	Displays the processor L3 cache size.

Standard CMOS Features

System Time (hh:mm:ss)	Displays the current time.
System Date (mm:dd:yy)	Displays current date.
SATA 1	Displays the SATA 1 drive integrated in the computer.
SATA 2	Displays the SATA 2 drive integrated in the computer
SATA 3	Displays the SATA 3 drive integrated in the computer.
SATA 4	Displays the SATA 4 drive integrated in the computer.

Standard CMOS Features

SATA 5	Displays the SATA 5 drive integrated in the computer
SATA 6	Displays the SATA 6 drive integrated in the computer.
Wait for 'F1' If Errors	If enabled, the system will HALT during boot to display system errors.

Advanced BIOS Features

NumLock Status	Select power-on state for num-lock.
ACPI APIC support	Include ACPI APIC table pointer to RSDT pointer list.
OptionROM Display Screen	Allows you to enable or disable the RAID Option ROM screen during POST.

Boot Configuration Features

1st Boot Device	Displays the first boot device.
2nd Boot Device	Displays the second boot device.
Hard Disk Drives	Sets the hard drive boot priority. The items displayed are dynamically updated according to the hard drives detected.
CD/DVD Drives	Sets the CD/DVD drive boot priority.

CPU Configuration

XD Bit Capability	Enable XD Bit Capability to allow the processor to distinguish between the bits of code that can be executed and the ones that cannot be executed.
Intel® Speedstep™ tech	If enabled, the processor clock speed and core voltage are adjusted dynamically based on the processor load.
Intel® C State Tech	If enabled, C State: Processor idle is set to C2/C3/C4.
Intel® HT Technology (available on Aurora-R2 only)	If disabled only one thread per enabled core is active.

Integrated Devices	
USB Functions	Allows you to enable or disable the integrated USB controller.
HD Audio Controller	Allows you to enable or disable the integrated audio controller.
Onboard IEEE1394 Controller	Allows you to enable or disable the onboard IEEE 1394 controller.
LAN1 BCM5784 Device (available on Aurora and Aurora ALX only)	Allows you to enable or disable the onboard LAN controller.
Onboard LAN Controller (available on Aurora-R2 only)	Allows you to enable or disable the onboard LAN controller.
LAN1 Option ROM (available on Aurora and Aurora ALX only)	Allows you to enable and disable the network controller's boot option.
Onboard LAN Boot ROM (available on Aurora-R2 only)	Allows you to enable and disable the network controller's boot option.
SiL3132 E-Sata Device (available on Aurora and Aurora ALX only)	Allows you to enable and disable the e-SATA controller.
JMicron-362 E-SATA Device (available on Aurora-R2 only)	Allows you to enable and disable the e-SATA controller.

Integrated Devices	
Configure SATA#1-6 as (available on Aurora and Aurora ALX only)	Allows you to configure the integrated hard drive controller to AHCI or RAID.
SATA Mode (available on Aurora-R2 only)	Allows you to configure the integrated hard drive controller to AHCI or RAID.
AHCI CD/DVD Boot Time out	Allows you to set the wait time for SATA or CD/DVD in AHCI mode.

Power Management Setup	
Suspend Mode	Sets the energy-saving mode of the ACPI function.
AC Recovery	Sets what action the computer takes when power is restored.
Remote Wakeup (available on Aurora and Aurora ALX only)	Sets the system to wake up from an onboard LAN, PCIE-X1 LAN card, or a PCI LAN card.
Auto Power On	Allows the computer to start up at a certain time.

Frequency/Voltage Control	
CPU Speed	Displays the current processor speed.
Memory Speed	Displays the current memory speed.
Current QPI Speed (available on Aurora and Aurora ALX only)	Displays current QPI speed.
Current DMI Speed (available on Aurora-R2 only)	Displays current DMI speed.
QPI Frequency (available on Aurora and Aurora ALX only)	Allows you to change the QPI frequency.
DMI Frequency (available on Aurora-R2 only)	Allows you to change the DMI frequency.
Memory Ratio	Allows you to change the memory ratio.
Core (Non-Turbo) Ratio	Displays the ratio between the processor core clock and the FSB frequency.
Advance DRAM Configuration	Allows you to access the advance DRAM configuration submenu
Overclock Configuration	Allows you to access the overclock configuration submenu

Frequency/Voltage Control	
Overvoltage Configuration	Allows you to access the overvoltage configuration submenu
Load Level1 OC Setting	Allows you to restore the Level 1 overclocking settings that were shipped from the factory (only displayed with an XE processor).

Advance DRAM Configuration Submenu	
Memory-Z	Opens submenu to display the SPD configuration for each memory module.
Advanced Memory Settings	Allows you to toggle to Manual mode and set all of the timing parameters.
tCL	Displays the Column Address Strobe Latency (editable in Manual Mode).
tRCD	Displays timing of RAS to CAS delay (editable in Manual Mode).
tRP	Displays timing of RAS Precharge (editable in Manual Mode).
tRAS	Displays timing of Row Address Strobe (editable in Manual Mode).

Advance DRAM Configuration Submenu

tRFC	Displays timing of Refresh to Archive/ Refresh cycle time (editable in Manual Mode).
tWR	Displays timing of Write Recover (editable in Manual Mode).
tWTR	Displays Write to Read delay (editable in Manual Mode).
tRRD	Displays RAS to RAS Delay (editable in Manual Mode).
tRTP	Displays Read to Precharge command delay (editable in Manual Mode).
1T/2T Timing	Displays the Command Rate (editable in Manual Mode).

Overclock Configuration Submenu

Adjust CPU BClk (MHz)	Allows you to adjust BClk of processor.
Spread Spectrum	Enable/disable spread spectrum modulation.
Adjust PCI Frequency (MHz) (available on Aurora and Aurora ALX only)	Allows you to adjust PCI frequency.
Adjust PCI-E Frequency (MHz)	Allows you to adjust PCI-E frequency.
Intel® TurboMode tech	If enabled, allows processor to run at faster frequencies than marked.
[1-4] Core CPU Turbo Ratio Limit (available on Aurora and Aurora ALX only)	Limit ratio for cores 1-4 (XE processors only).
Turbo Mode TDC Limit Override	Allows you to program the current thresholds for the processor while in turbo mode.
Turbo Mode TDP Limit Override	Allows you to program the power thresholds for the processor while in turbo mode.

Overvoltage Configuration Submenu

CPU Temperature Sensor	Displays the processor temperature in Celsius and Fahrenheit.
VCore	Displays processor core voltage.
Dynamic CPU VCore Offset	Processor core voltage offset.
DDR3 Memory Voltage	Adjust the DDR3 memory voltage.
IOH Voltage	Adjust the IOH voltage.
QPI and Uncore Voltage (available on Aurora and Aurora ALX only)	Adjust QPI and uncore voltage.
DMI and Uncore Voltage (available on Aurora-R2 only)	Adjust DMI and uncore voltage.

BIOS Security Features

Change Supervisor Password	Allows you to change the supervisor password.
Change User Password	Allows you to change the user password. You cannot use the user password to enter the BIOS setup, during POST.

Exit

Exit Options	Provides options to Save Changes and Exit, Discard Changes and Exit, Load Optimal Defaults, and Discard Changes.

Clearing Forgotten Passwords and CMOS Settings

1. Follow the instructions in “Before You Begin” on page 6.

WARNING: The computer must be disconnected from the electrical outlet to clear the CMOS setting.

2. Remove the left side-panel (see “Removing the Left Side-Panel” on page 11).
3. Reset the current password and CMOS settings:
   a. Locate the 3-pin CMOS or password-reset jumper on the system board (see “System Board Components” on page 14).
   b. Remove the jumper plug from the CMOS or password-reset jumper pins 2 and 3.
   c. Place the jumper plug on the CMOS or password-reset jumper pins 1 and 2 and wait for approximately five seconds.
   d. Remove the jumper plug and replace it on the CMOS or password reset jumper pins 2 and 3.

CMOS:

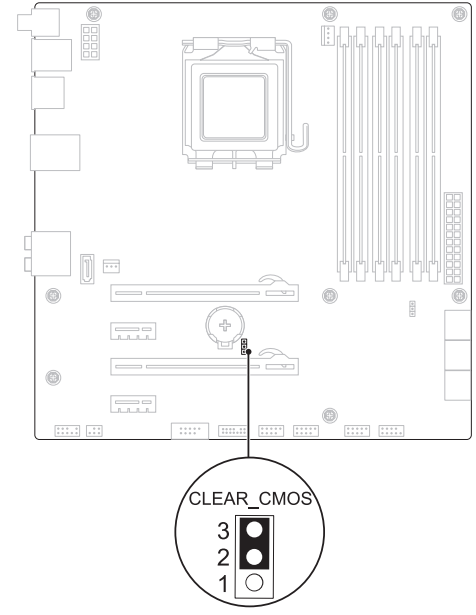

PASSWORD:

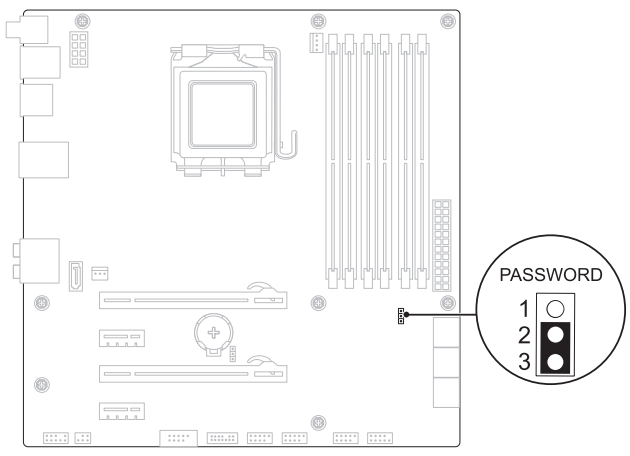

4. Replace the left side-panel (see “Replacing the Left Side-Panel” on page 11).
5. Connect your computer and devices to electrical outlets and then turn them on.

Flashing the BIOS

The BIOS may require flashing when an update is available or when replacing the system board. To flash the BIOS:

1. Turn on the computer.
2. Go to **support.dell.com/support/downloads**.
3. Locate the BIOS update file for your computer:

- If you have your computer's Service Tag:

   a. Click **Enter a Service Tag**.
   b. Enter your computer's Service Tag in the **Enter a service tag:** field, click **Go**, and proceed to step 6.

- If you do not have your computer's Service Tag:

   a. Click **Select Your Product Model** in the **Select Your Entry Method** list.
   b. Select the type of product in the **Select Your Product Family** list.
   c. Select the product brand in the **Select Your Product Line** list.
   d. Select the product model number in the **Select Your Product Model** list.

NOTE: If you have selected a different model and want to start over again, click **Start Over** on the top right of the menu.

   e. Click **Confirm**.

4. A list of results appear on the screen. Click **BIOS**.
5. Click **Download Now** to download the latest BIOS file. The **File Download** window appears.
6. Click **Save** to save the file on your desktop. The file downloads to your desktop.
7. Click **Close** if the **Download Complete** window appears. The file icon appears on your desktop and is titled the same as the downloaded BIOS update file.
8. Double-click the file icon on the desktop and follow the procedures that appear on the screen.

APPENDIX A: CONTACTING ALIENWARE

NOTE: If you do not have an active Internet connection, you can find contact information on your purchase invoice, packing slip, bill, or Dell product catalog.

Dell provides several online and telephone-based support and service options. Because availability varies by country and product, some services may not be available in your area.

To contact Dell for sales, technical support, or customer service issues:

1. Visit **www.dell.com/contactdell**.
2. Select your country or region.
3. Select the appropriate service or support link based on your need.
4. Choose the method of contacting Dell that is convenient for you.

NOTE: For telephone support in the United States, call 1-800-Alienware.

Websites

You can learn about Alienware® products and services on the following websites:

- **www.dell.com**
- **www.dell.com/ap** (Asian/Pacific countries only)
- **www.dell.com/jp** (Japan only)
- **www.euro.dell.com** (Europe only)
- **www.dell.com/la** (Latin American and Caribbean countries)
- **www.dell.ca** (Canada only)

You can access Alienware Support through the following websites:

- **support.dell.com**
- **support.jp.dell.com** (Japan only)
- **support.euro.dell.com** (Europe only)
- **support.la.dell.com** (Argentina, Brazil, Chile, Mexico)